BEST CARBIDE

- Advanced tools for industry™
- Precision crafted excellence™

Group 300 - 400
Solid Carbide End Mills (Metric)

2 x D
4 x D
6 x D
8 x D
10 x D
12 x D
14 x D
16 x D
20 X D

S square end

0.05 / 0.1 / 0.2
0.5 / 1.0 / 2.0

CR corner radius

h5 / h6 / h8
± 0.004
Radius Tolerance

BN ball nose

Phone: 310-464-8050 • Fax: 310-464-8058 • sales@bestcarbide.com • www.bestcarbide.com

BEST CARBIDE

Performance:

- Optimized carbide grades
- Highly innovative tool geometries
- Superior grinding quality
- Advanced tool coating technology

Quality:

- Latest CNC grinding technology
- State of the art facility and quality control equipment
- 103 automated CNC grinding machines
- Over 34-years of experience and expertise
- Best product / price value

Service:

- Commitment to total customer satisfaction
- Providing solutions with performance and special tools
- Fast turn-around time for quotations
- Outstanding order fulfillment
- Excellent customer service

BEST CARBIDE CUTTING TOOLS, INC.

1401 W. Walnut Street, Rancho Dominguez, CA 90220 USA

Phone: 310-464-8050 • Fax: 310-464-8058 • Web: www.bestcarbide.com • Email: sales@bestcarbide.com

- **Advanced tools for industry™**
- **Precision crafted excellence™**

Made in the USA

Product Strategy

In order to meet the constantly increasing requirements for higher productivity, our product strategy focuses on the following tool objectives:

- Greatest cutting performance
- Highest tool quality
- Best cost competitiveness
- Improved machining solutions for our customers

These goals are being accomplished by a combination of the following factors:

Optimized Carbide Grades

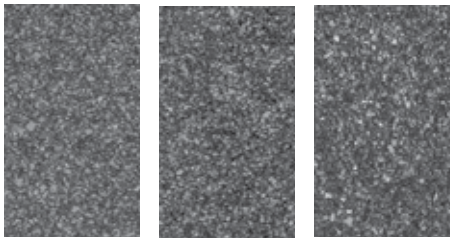

- Fine carbide grades (1µm - 1.3µm)
- Submicron carbide grades (0.6µm - 0.9µm)
- Ultra fine carbide grades (0.2µm - 0.5µm)
- Nano carbide grades (<0.2µm)

Highly Innovative Tool Geometries

- Unique flute forms
- Various honed cutting edge contours
- Special grinding features in form and finish
- Variable helix and variable flute offsets
- Optimized rake, clearance and helix angles

Superior Grinding Finish & Dimensional Accuracy

- Flute Concentricity cutting diameter range: (0.2 mm - 3.0 mm): 0.003 mm
- Flute Concentricity cutting diameter range: (4.0 mm - 6.0 mm): 0.006 mm
- Flute Concentricity cutting diameter range: (8.0 mm - 12.0 mm): 0.008 mm
- Flute Concentricity cutting diameter range: (14.0 mm - 20.0 mm): 0.010 mm
- Radius Tolerance: +/- 0.004 mm
- Shank Concentricity: 0.002 mm
- Cutting Diameter Tolerance: h5, h6 & h8
- Shank Diameter Tolerance: h5

Advanced Tool Coating Technology

- AlTiN coating (coating symbol "A")
- HP coating for stainless steels, titanium and high temperature alloys (coating symbol "D")
- HP coating for aluminum and non-ferrous materials (coating symbol "L")
- HP coating for copper (coating symbol "N")
- Nano composite coating (coating symbol "R")
- Hard coating for hardened steels ≥ 50 HRC (coating symbol "T")
- CVD diamond coating "Classic" for graphite (coating symbol "ZC")
- CVD diamond coating "Plus" for composites (coating symbol "ZP")

Coatings - Symbols

All coated tools featured in this catalog are identified by a letter designation (coating symbol) that is stated as the last digit of the tool number. Tools without a letter designation are in uncoated condition. The following coating symbols apply:

	"A"	AlTiN coating
	"D"	HP coating for stainless steels, titanium and high temperature alloys
	"L"	HP coating for aluminum and non-ferrous materials
	"N"	HP coating for copper
	"R"	Nano composite coating
	"T"	Hard coating for hardened steels ≥ 50 HRC
	"ZC"	CVD diamond coating "Classic" for graphite
	"ZP"	CVD diamond coating "Plus" for composites

Best Carbide provides a coating recommendation for each tool series. The recommended coating option is indicated by the coating symbols mentioned above. However, every tool can be ordered in the coating option of your choice. Simply add the appropriate coating symbol behind the uncoated tool number on your purchase order. Best Carbide is committed to offering the latest coating technology. Please contact us at "sales@bestcarbide.com" for review of your best coating choices.

This catalog features tools in metric specifications. All technical specifications, tolerances, illustrations, coating colors, product images, symbols and recommendations published in this catalog are subject to change without prior notice. All technical information serves as a guide only. Actual speed and feed rates may vary in each application.

Tool Geometry

End Mills are cutting tools used in industrial milling applications. Unlike drills, which are only cutting axially (ap), most end mills can cut axially (ap) and radially (æ). End mills are used in milling applications such as ramp milling, side milling, face milling and 3D contouring.

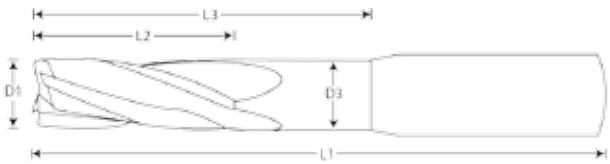

D1: Cutting Diameter
D2: Shank Diameter
D3: Neck Diameter
L1: Overall Length
L2: Length of Cut
L3: Total Reach Length

Radial Rake Angle
(Positive Shown)

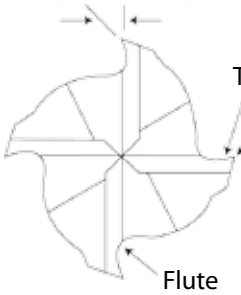

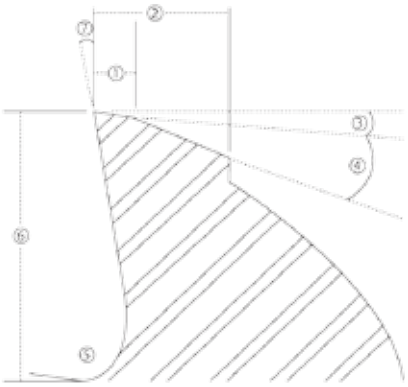

1. Primary Clearance Width
2. Land Width
3. Primary Relief Angle
4. Secondary Relief Angle
5. Flute Gullet
6. Flute Depth
7. Rake Angle

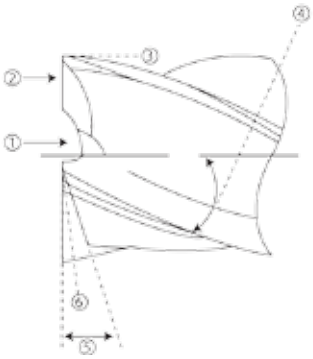

1. End Gash
2. End Cutting Edge
3. Peripheral Cutting Edge
4. Helix Angle
5. Secondary Relief Angle
6. Primary Relief Angle

Tool and Application Symbols

Number of Flutes "Z"

Work Piece Materials

Tolerances

Cutting Shapes

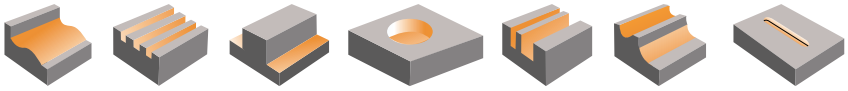

Milling Types

End Mill Features

Machining Applications

Tolerances

Cutting Diameter	h5	h6	h8
0.2 mm – 3 mm	+ 0.000 -0.004 mm	+ 0.000 -0.006 mm	+ 0.000 -0.014 mm
> 3 mm – 6 mm	+ 0.000 -0.005 mm	+ 0.000 -0.008 mm	+ 0.000 -0.018 mm
> 6 mm – 10 mm	+ 0.000 -0.006 mm	+ 0.000 -0.009 mm	+ 0.000 -0.022 mm
> 10 mm – 14 mm	+ 0.000 -0.008 mm	+ 0.000 -0.011 mm	+ 0.000 -0.027 mm
> 14 mm – 18 mm	+ 0.000 -0.008 mm	+ 0.000 -0.011 mm	+0.000 -0.027 mm
> 18 mm – 24 mm	+ 0.000 -0.009 mm	+ 0.000 -0.013 mm	+ 0.000 -0.033 mm

Product Index

Square End – Universal and High Performance Carbide End Mills

301 Series	Universal Application Carbide End Mills – Regular Length	7
305 Series	Universal Application Carbide End Mills – Stub Length	8
311 Series	Universal Application Carbide End Mills – Extra Long Length	9
315 Series	Universal Application Carbide End Mills – Extra Long Length	10
321 Series	Miniature Carbide End Mills - 3mm Shank	11
325 Series	Miniature Carbide End Mills - 4mm Shank	12
338 Series	HSC Miniature Carbide End Mills for Aluminum - Long Reach	13-14
351 Series	HPC Carbide End Mills – Hard Milling	15
361 Series	HPC Carbide End Mills – Hard Milling	17
371 Series	HSC Super Accuracy Carbide End Mills for Aluminum	18
375 Series	HSC Super Accuracy Carbide End Mills for Aluminum – Long Length	19
378 Series	HSC Super Accuracy Carbide End Mills for Aluminum – Extra Long Reach	20
385 Series	HSC Super Accuracy Carbide End Mills for Aluminum – Stub Length	21
391 Series	HPC Finishing Carbide End Mills for Steel and High Temperature Alloys	22
401 Series	HFC Carbide End Mills – Variable Helix / Offset	23
411 Series	HFC Finishing Carbide End Mills for Stainless Steel– Variable Helix / Offset	24

Corner Radius – Universal and High Performance Carbide End Mills

339 Series	HSC Miniature Carbide End Mills for Aluminum – Long Reach	26-27
342 Series	HSC Miniature Hard Milling Carbide End Mills – Long Reach	28-29
302 Series	Universal Application Carbide End Mills – Regular Length	32
352 Series	HPC Carbide End Mills – Hard Milling	33
362 Series	HPC Carbide End Mills – Hard Milling	34
372 Series	HSC Super Accuracy Carbide End Mills for Aluminum - Regular Length	35-36
376 Series	HSC Super Accuracy Carbide End Mills for Aluminum - Long Length	37
379 Series	HSC Super Accuracy Carbide End Mills for Aluminum - Extra Long Reach	38
382 Series	HSC Super Accuracy Carbide End Mills for Aluminum – Long Reach	39
392 Series	HPC Finishing Carbide End Mills for Steel and High Temperature Alloys	41
402 Series	HFC Carbide End Mills – Variable Helix / Offset	42
409 Series	HFC Carbide End Mills - Variable Helix / Offset - Long Length / Long Reach	43
412 Series	HFC Carbide End Mills for Stainless Steel – Variable Helix / Offset	44

Radius – Universal and High Performance Carbide End Mills

303 Series	Universal Application Carbide End Mills – Regular Length	46
307 Series	Universal Application Carbide End Mills – Stub Length	47
317 Series	Universal Application Carbide End Mills – Extra Long Length	48
327 Series	Miniature Carbide End Mills – 4mm Shank	49
333 Series	Miniature Carbide End Mills – 3mm Shank	50
340 Series	HSC Miniature Carbide End Mills for Aluminum – Long Reach	51-52
343 Series	HSC Miniature Hard Milling Carbide End Mills – Long Reach	53-55
350ZC Series	HSC Diamond Coated Carbide End Mills for Graphite	60-61
350ZP Series	HSC Diamond Coated Carbide End Mills for Composites	62-63
353 Series	HPC Carbide End Mills – Hard Milling	64
373 Series	HSC Super Accuracy Carbide End Mills for Aluminum	65
383 Series	HSC Super Accuracy Carbide End Mills for Aluminum – Extra Long Reach	66
403 Series	HFC Carbide End Mills – Variable Helix / Offset	67
410 Series	HFC Carbide End Mills – Variable Helix / Offset– Long Length / Long Reach	68
413 Series	HFC Carbide End Mills for Stainless Steel – Variable Helix / Offset	69

BEST CARBIDE

...simply the best choice for advanced carbide cutting tools

Square End • Universal and High Performance Carbide End Mills

Best Carbide manufactures a complete line of cylindrical (square end) universal and high performance end mills. The size range starts with the smallest cutting diameter of 0.2 mm and ends at a cutting diameter of 25 mm. Small size increments, various length of cut choices as well as a full range of stub, regular, long, and extra long length end mills ensure that you will easily find the right end mill for your application. The product line consists of a complete line of miniature (micro), universal application and high performance end mills providing you with the best choice for a broad machining range and / or to achieve the highest productivity rates in a specific milling application.

Our end mills feature the following performance factors:

- **Optimized Carbide Grades**
  (fine, submicron, ultra fine and nano grades)
- **Highly Innovative Tool Geometries**
  (optimized rake, clearance and helix angles, variable helix and variable flute offsets)
- **Superior Grinding Finish & Dimensional Accuracy**
  (excellent shank and flute concentricity, smooth cutting edge quality, precise and consistent tool geometries)
- **Advanced Tool Coating Technologies**
  (full range of standard and specialized coatings)

Tool Series 301 • Universal Application Carbide End Mills – Regular Length

Uncoated Tool # 2 Flutes	Uncoated Tool # 3 Flutes	Uncoated Tool # 4 Flutes	Size D1	Shank D2	O.A.L L1	L.O.C L2	*Coating Choices
301-2010	301-3010	301-4010	1	3	38	4	-A
301-2015	301-3015	301-4015	1.5	3	38	4.5	-A
301-2020	301-3020	301-4020	2	3	38	6.3	-A
301-2025	301-3025	301-4025	2.5	3	38	9.5	-A
301-2030	301-3030	301-4030	3	3	38	12	-A
301-2035	301-3035	301-4035	3.5	4	50	12	-A
301-2040	301-3040	301-4040	4	4	50	14	-A
301-2045	301-3045	301-4045	4.5	6	50	16	-A
301-2050	301-3050	301-4050	5	6	50	16	-A
301-2060	301-3060	301-4060	6	6	50	19	-A
301-2070	301-3070	301-4070	7	8	63	19	-A
301-2080	301-3080	301-4080	8	8	63	20	-A
301-2090	301-3090	301-4090	9	10	75	22	-A
301-2100	301-3100	301-4100	10	10	75	22	-A
301-2110	301-3110	301-4110	11	12	75	25	-A
301-2120	301-3120	301-4120	12	12	75	25	-A
301-2130	301-3130	301-4130	13	13	89	26	-A
301-2140	301-3140	301-4140	14	14	89	32	-A
301-2150	301-3150	301-4150	15	16	89	32	-A
301-2160	301-3160	301-4160	16	16	89	32	-A
301-2180	301-3180	301-4180	18	18	100	38	-A
301-2190	301-3190	301-4190	19	19	100	38	-A
301-2200	301-3200	301-4200	20	20	100	38	-A
301-2250	301-3250	301-4250	25	25	100	38	-A

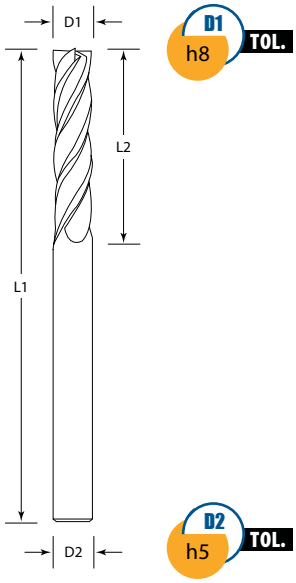

Shown uncoated (left) and coated (right) with AlTiN coating ("A"), Add letter "A" for AlTiN coating. Example: 301-2000-A.
For more coating information please refer to page 4.

BEST CARBIDE

Tool Series 305 • Universal Application Carbide End Mills – Stub Length

2 FLUTES | 4 FLUTES | ROUGHING | SEMI FINISHING | FINISHING | MILLING SOFT MATERIAL | MILLING MEDIUM MATERIAL

Uncoated Tool # 2 Flutes	Uncoated Tool # 4 Flutes	Size D1	Shank D2	O.A.L L1	L.O.C L2	*Coating Choices
305-2010	305-4010	1	3	38	2	-A
305-2015	305-4015	1.5	3	38	3	-A
305-2020	305-4020	2	3	38	4	-A
305-2025	305-4025	2.5	3	38	5	-A
305-2030	305-4030	3	3	38	6	-A
305-2035	305-4035	3.5	4	50	7	-A
305-2040	305-4040	4	4	50	8	-A
305-2045	305-4045	4.5	6	50	9.5	-A
305-2050	305-4050	5	6	50	10	-A
305-2060	305-4060	6	6	50	12	-A
305-2070	305-4070	7	8	50	12	-A
305-2080	305-4080	8	8	50	12	-A
305-2090	305-4090	9	9	50	14	-A
305-2100	305-4100	10	10	50	16	-A
305-2110	305-4110	11	12	63	19	-A
305-2120	305-4120	12	12	63	19	-A

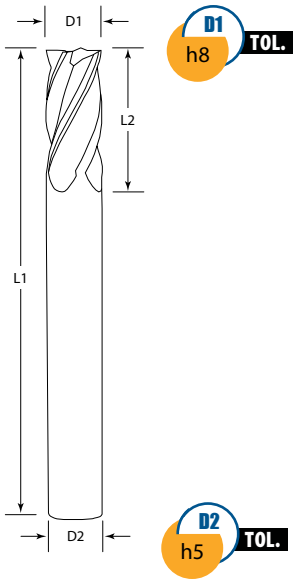

Shown uncoated (left) and coated (right) with AlTiN coating ("A"). Add letter "A" for AlTiN coating. Example: 305-2000-A.
For more coating information please refer to page 4.

Tool Series 311 • Universal Application Carbide End Mills – Extra Long Length

2 FLUTES | 4 FLUTES | SEMI FINISHING | FINISHING | MILLING SOFT MATERIAL | MILLING MEDIUM MATERIAL

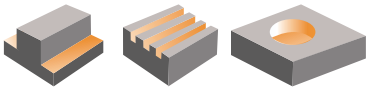

Uncoated Tool # 2 Flutes	Uncoated Tool # 4 Flutes	Size D1	Shank D2	O.A.L L1	L.O.C L2	*Coating Choices
311-2020	311-4020	2	6	75	10	-A
311-2025	311-4025	2.5	6	75	15	-A
311-2030	311-4030	3	6	75	15	-A
311-2035	311-4035	3.5	6	75	15	-A
311-2040	311-4040	4	6	75	20	-A
311-2045	311-4045	4.5	6	75	20	-A
311-2050	311-4050	5	6	75	20	-A
311-2055	311-4055	5.5	6	75	20	-A
311-2060	311-4060	6	6	100	30	-A
311-2080	311-4080	8	8	100	40	-A
311-2100	311-4100	10	10	100	50	-A
311-2120	311-4120	12	12	127	55	-A

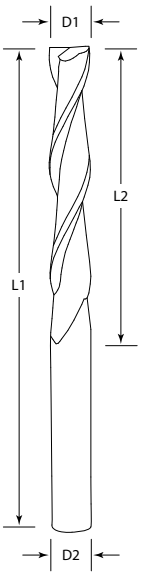

D1 h8 TOL.

D2 h5 TOL.

Shown coated with AlTiN coating ("A"). Add letter "A" for AlTiN coating. Example: 311-2000-A.
For more coating information please refer to page 4.

BEST CARBIDE

Tool Series 315 • Universal Application Carbide End Mills – Extra Long Length

2 FLUTES | 4 FLUTES | SEMI FINISHING | FINISHING | MILLING SOFT MATERIAL | MILLING MEDIUM MATERIAL

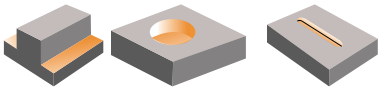

Uncoated Tool # 2 Flutes	Uncoated Tool # 4 Flutes	Size D1	Shank D2	O.A.L L1	L.O.C L2	*Coating Choices
315-2020	315-4020	2	3	75	25	-A
315-2030	315-4030	3	3	75	25	-A
315-2040	315-4040	4	4	75	25	-A
315-2050	315-4050	5	6	75	25	-A
315-2060	315-4060	6	6	75	25	-A
315-2080	315-4080	8	8	75	25	-A
315-2100	315-4100	10	10	100	38	-A
315-2120-50	315-4120-50	12	12	100	50	-A
315-2120-75	315-4120-75	12	12	150	75	-A
315-2140	315-4140	14	14	150	75	-A
315-2160	315-4160	16	16	150	75	-A
315-2180	315-4180	18	18	150	75	-A
315-2200	315-4200	20	20	150	75	-A
315-2250	315-4250	25	25	150	75	-A

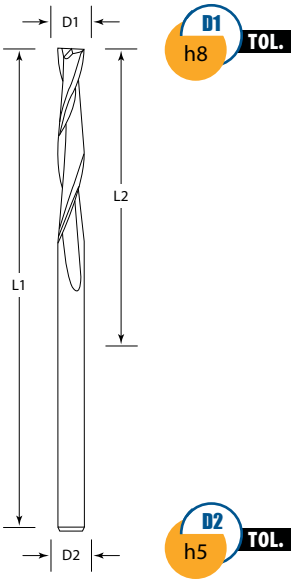

Shown uncoated (left) and coated (right) with AlTiN coating ("A"). Add letter "A" for AlTiN coating. Example: 315-2000-A.
For more coating information please refer to page 4.

Tool Series 321 • Miniature Carbide End Mills - 3mm Shank

2 FLUTES | SEMI FINISHING | FINISHING | MILLING SOFT MATERIAL | MILLING MEDIUM MATERIAL

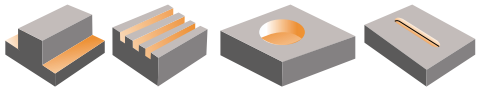

Uncoated Tool Number	Coated Tool Number	Size D1	Shank D2	O.A.L L1	L.O.C L2	Flutes Z
321-2002	321-2002-A	0.2	3	38	0.4	2
321-2003	321-2003-A	0.3	3	38	0.9	2
321-2004	321-2004-A	0.4	3	38	1.2	2
321-2005	321-2005-A	0.5	3	38	1.5	2
321-2006	321-2006-A	0.6	3	38	1.8	2
321-2007	321-2007-A	0.7	3	38	2.1	2
321-2008	321-2008-A	0.8	3	38	2.4	2
321-2009	321-2009-A	0.9	3	38	2.7	2
321-2010	321-2010-A	1	3	38	3.0	2
321-2011	321-2011-A	1.1	3	38	3.3	2
321-2012	321-2012-A	1.2	3	38	3.8	2
321-2013	321-2013-A	1.3	3	38	3.9	2
321-2014	321-2014-A	1.4	3	38	4.2	2
321-2015	321-2015-A	1.5	3	38	4.2	2
321-2016	321-2016-A	1.6	3	38	4.8	2
321-2017	321-2017-A	1.7	3	38	5.1	2
321-2018	321-2018-A	1.8	3	38	5.3	2
321-2019	321-2019-A	1.9	3	38	5.7	2
321-2020	321-2020-A	2	3	38	6.0	2
321-2025	321-2025-A	2.5	3	38	8.0	2

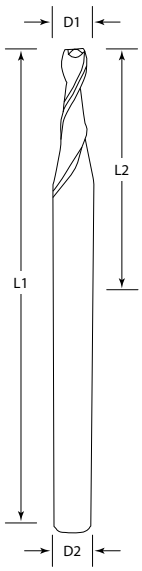

D1 h8 TOL.

D2 h5 TOL.

**Shown uncoated (left) and coated (right) with AlTiN coating ("A"). Add letter "A" for AlTiN coating. Example: 321-2005-A.*
For more coating information please refer to page 4.

BEST CARBIDE

Tool Series 325 • Miniature Carbide End Mills - 4mm Shank

2 FLUTES | SEMI FINISHING | FINISHING | MILLING SOFT MATERIAL | MILLING MEDIUM MATERIAL

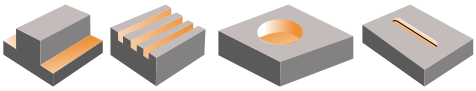

Uncoated Tool Number	Coated Tool Number	Size D1	Shank D2	O.A.L L1	L.O.C L2	Flutes Z
325-2002	325-2002-A	0.2	4	50	0.4	2
325-2003	325-2003-A	0.3	4	50	0.9	2
325-2004	325-2004-A	0.4	4	50	1.2	2
325-2005	325-2005-A	0.5	4	50	1.5	2
325-2006	325-2006-A	0.6	4	50	1.8	2
325-2007	325-2007-A	0.7	4	50	2.1	2
325-2008	325-2008-A	0.8	4	50	2.4	2
325-2009	325-2009-A	0.9	4	50	2.7	2
325-2010	325-2010-A	1	4	50	3.0	2
325-2011	325-2011-A	1.1	4	50	3.3	2
325-2012	325-2012-A	1.2	4	50	3.8	2
325-2013	325-2013-A	1.3	4	50	3.9	2
325-2014	325-2014-A	1.4	4	50	4.2	2
325-2015	325-2015-A	1.5	4	50	4.2	2
325-2016	325-2016-A	1.6	4	50	4.8	2
325-2017	325-2017-A	1.7	4	50	5.1	2
325-2018	325-2018-A	1.8	4	50	5.3	2
325-2019	325-2019-A	1.9	4	50	5.7	2
325-2020	325-2020-A	2	4	50	6.0	2
325-2025	325-2025-A	2.5	4	50	8.0	2

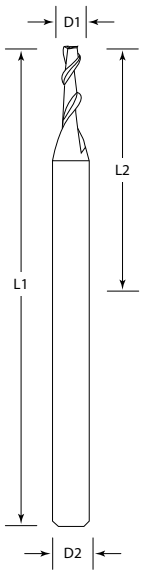

D1 h8 TOL.

D2 h5 TOL.

**Shown uncoated (left) and coated (right) with AlTiN coating ("A"). Add letter "A" for AlTiN coating. Example: 325-2000-A.*
For more coating information please refer to page 4.

Tool Series 338 • HSC Miniature Carbide End Mills for Aluminum - Long Reach

2 FLUTES | SEMI FINISHING | FINISHING | RIB MINATURE | MILLING SOFT MATERIAL | HSC HIGH SPEED

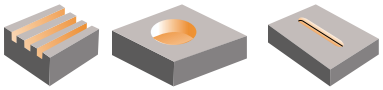

Uncoated Tool Number	Coated Tool Number	Size D1	Shank D2	Neck D3	O.A.L L1	L.O.C. L2	Reach L3	Flutes Z
338-2002-05	338-2002-05-L	0.2	4	0.17	45	0.15	0.5	2
338-2002-1	338-2002-1-L	0.2	4	0.17	45	0.15	1.0	2
338-2003-1	338-2003-1	0.3	4	0.27	45	0.24	1.0	2
338-2003-2	338-2003-2-L	0.3	4	0.27	45	0.24	2.0	2
338-2004-2	338-2004-2-L	0.4	4	0.37	45	0.30	2.0	2
338-2004-3	338-2004-3-L	0.4	4	0.37	45	0.30	3.0	2
338-2004-4	338-2004-4-L	0.4	4	0.37	45	0.30	4.0	2
338-2005-3	338-2005-3-L	0.5	4	0.47	45	0.35	3.0	2
338-2005-4	338-2005-4-L	0.5	4	0.47	45	0.35	4.0	2
338-2005-5	338-2005-5-L	0.5	4	0.47	45	0.35	5.0	2
338-2005-6	338-2005-6-L	0.5	4	0.47	45	0.35	6.0	2
338-2005-8	338-2005-8-L	0.5	4	0.47	45	0.35	8.0	2
338-2005-10	338-2005-10-L	0.5	4	0.47	45	0.35	10.0	2
338-2006-4	338-2006-4-L	0.6	4	0.57	45	0.40	4.0	2
338-2006-6	338-2006-6-L	0.6	4	0.57	45	0.40	6.0	2
338-2006-8	338-2006-8-L	0.6	4	0.57	45	0.40	8.0	2
338-2006-10	338-2006-10-L	0.6	4	0.57	45	0.40	10.0	2
338-2006-12	338-2006-12-L	0.6	4	0.57	53	0.40	12.0	2
338-2008-4	338-2008-4-L	0.8	4	0.77	45	0.50	4.0	2
338-2008-6	338-2008-6-L	0.8	4	0.77	45	0.50	6.0	2
338-2008-8	338-2008-8-L	0.8	4	0.77	45	0.50	8.0	2
338-2008-10	338-2008-10-L	0.8	4	0.77	45	0.50	10.0	2
338-2008-12	338-2008-12-L	0.8	4	0.77	53	0.50	12.0	2
338-2008-16	338-2008-16-L	0.8	4	0.77	53	0.50	16.0	2
338-2010-4	338-2010-4-L	1	4	0.94	45	0.80	4.0	2
338-2010-6	338-2010-6-L	1	4	0.94	45	0.80	6.0	2
338-2010-8	338-2010-8-L	1	4	0.94	45	0.80	8.0	2
338-2010-10	338-2010-10-L	1	4	0.94	45	0.80	10.0	2
338-2010-12	338-2010-12-L	1	4	0.94	53	0.80	12.0	2
338-2010-16	338-2010-16-L	1	4	0.94	53	0.80	16.0	2
338-2010-20	338-2010-20-L	1	4	0.94	63	0.80	20.0	2
338-2012-6	338-2012-6-L	1.2	4	1.14	45	1.00	6.0	2

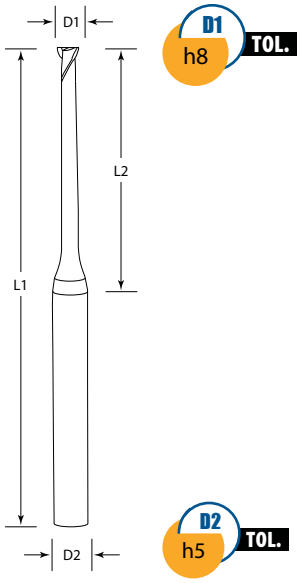

Special Tool Features and Advantages

- ★ Highest Tolerance Accuracy
- ★ Highest Grinding Accuracy
- ★ Superior Grinding Finish
- ★ Special Neck Form for Greater Reach

Cutting Diameter	h5	h8
0.2 mm – 1.2 mm	+ 0.000 -0.004 mm	+ 0.000 -0.014 mm

Shown uncoated (left) and coated (right) with HP coating for aluminum and non-ferrous materials ("L"). For more coating information please refer to page 4.

BEST CARBIDE

Tool Series 338 • HSC Miniature Carbide End Mills for Aluminum – Long Reach

2 FLUTES | SEMI FINISHING | FINISHING | RIB MINATURE | MILLING SOFT MATERIAL | HSC HIGH SPEED

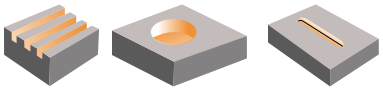

Uncoated Tool Number	Coated Tool Number	Size D1	Shank D2	Neck D3	O.A.L L1	L.O.C. L2	Reach L3	Flutes Z
338-2012-8	338-2012-8-L	1.2	4	1.14	45	1.00	8.0	2
338-2012-10	338-2012-10-L	1.2	4	1.14	45	1.00	10.0	2
338-2012-12	338-2012-12-L	1.2	4	1.14	53	1.00	12.0	2
338-2012-16	338-2012-16-L	1.2	4	1.14	53	1.00	16.0	2
338-2012-20	338-2012-20-L	1.2	4	1.14	63	1.00	20.0	2
338-2015-8	338-2015-8-L	1.5	4	1.42	45	1.20	8.0	2
338-2015-12	338-2015-12-L	1.5	4	1.42	53	1.20	12.0	2
338-2015-16	338-2015-16-L	1.5	4	1.42	53	1.20	16.0	2
338-2015-20	338-2015-20-L	1.5	4	1.42	63	1.20	20.0	2
338-2015-25	338-2015-25-L	1.5	4	1.42	63	1.20	25.0	2
338-2020-8	338-2020-8-L	2	4	1.92	45	1.35	8.0	2
338-2020-12	338-2020-12-L	2	4	1.92	53	1.60	12.0	2
338-2020-16	338-2020-16-L	2	4	1.92	53	1.60	16.0	2
338-2020-20	338-2020-20-L	2	4	1.92	63	1.60	20.0	2
338-2020-25	338-2020-25-L	2	4	1.92	63	1.60	25.0	2
338-2020-30	338-2020-30-L	2	4	1.92	75	1.60	30.0	2
338-2030-8	338-2030-8-L	3	6	2.86	50	2.40	8.0	2
338-2030-12	338-2030-12-L	3	6	2.86	63	2.40	12.0	2
338-2030-16	338-2030-16-L	3	6	2.86	63	2.40	16.0	2
338-2030-20	338-2030-20-L	3	6	2.86	63	2.40	20.0	2
338-2030-25	338-2030-25-L	3	6	2.86	63	2.40	25.0	2
338-2030-30	338-2030-30-L	3	6	2.86	75	2.40	30.0	2

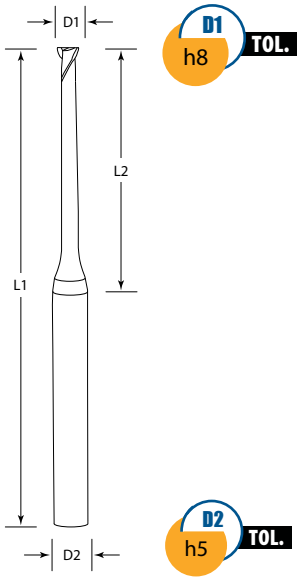

Special Tool Features and Advantages

- ★ **Highest Tolerance Accuracy**
- ★ **Highest Grinding Accuracy**
- ★ **Superior Grinding Finish**
- ★ **Special Neck Form for Greater Reach**

Cutting Diameter	h5	h8
1.2 mm – 3 mm	+ 0.000 -0.004 mm	+ 0.000 -0.014 mm
> 3 mm – 6 mm	+ 0.000 -0.005 mm	+ 0.000 -0.018 mm
> 6 mm – 10 mm	+ 0.000 -0.006 mm	+ 0.000 -0.022 mm
> 10 mm – 14 mm	+ 0.000 -0.008 mm	+ 0.000 -0.027 mm
> 14 mm – 18 mm	+ 0.000 -0.008 mm	+0.000 -0.027 mm
> 18 mm – 20 mm	+ 0.000 -0.009 mm	+ 0.000 -0.033 mm

**Shown uncoated (left) and coated (right) with HP coating for aluminum and non-ferrous materials ("L"). For more coating information please refer to page 4.*

Tool Series 351 • HPC Carbide End Mills – Hard Milling

4 FLUTES | SEMI FINISHING | FINISHING | MILLING HARD MATERIAL | HPC HIGH PRECISION | RMS PREMIUM FINISH | PVD SPECIAL COATING | Z SPECIAL FLUTE

Uncoated Tool Number	Coated Tool Number	Size D1	Shank D2	O.A.L L1	L.O.C L2	Flutes Z
351-4030	351-4030-T	3	6	50	8	4
351-4040	351-4040-T	4	6	50	11	4
351-4050	351-4050-T	5	6	50	13	4
351-4060	351-4060-T	6	6	50	13	4
351-4080	351-4080-T	8	8	63	19	4
351-4100	351-4100-T	10	10	75	22	4
351-4120	351-4120-T	12	12	75	26	4
351-4140	351-4140-T	14	14	75	26	4
351-4160	351-4160-T	16	16	89	32	4
351-4200	351-4200-T	20	20	100	38	4

*Best Carbide recommends hard milling applications only in coated conditions.

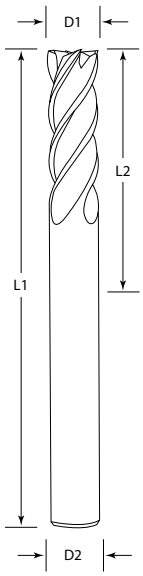

D1 h8 TOL.

D2 h5 TOL.

Special Tool Features and Advantages

- ★ Unique Flute Form
- ★ Polished Land Width
- ★ Superior Grinding Finish

*Shown uncoated (left) and coated (right) with hard coating for hardened steels ≥ 50 HRC ("T"). For more coating information please refer to page 4.

BEST CARBIDE

Tool Series 351 • Technical Information

Material:	Alloy Steel Stainless Steel Carbon Steel		Pre-Hardened Steel		Hardened Steel Titanium		High Temp. Alloys Inconel		Cast Iron	
Hardness:	25-35 HRC		35-45 HRC		45-55 HRC				150-200 HB	
Cutting Depth:	axial (1) ap: 0.2D1		axial (1) ap: 0.2D1		axial (1) ap: 0.2D1		axial (1) ap: 0.2D1		axial (1) ap: 0.5D1	
	radial (-) ae: 0.1D1		radial (-) ae: 0.1D1		radial (-) ae: 0.1D1		radial (-) ae: 0.1D1		radial (-) ae: 0.1D1	
Vc (m/min):	70		60		30		15		120	
Speed & Feed	n	Vf	n	Vf	n	Vf	n	Vf	n	Vf
	RPM	mm/min	RPM	mm/min	RPM	mm/min	RPM	mm/min	RPM	mm/min
Slotting										
D1:3	7,467	593	6,402	513	3,196	131	1,598	60	12,804	1,025
D1:4	5,598	673	4,804	573	2,402	191	1,196	1,001	9,568	1,156
D1:5	4,472	628	824	538	1,920	231	960	116	7,688	1,231
D1:6	3,739	603	3,196	513	1,598	251	804	131	6,402	1,276
D1:8	2,804	563	2,402	482	1,196	191	603	101	4,804	1,347
D1:10	2,241	543	1,920	462	965	191	482	101	3,839	1,226
D1:12	1,869	523	1,598	452	804	191	402	101	3,196	1,146
Side Milling										
D1:3	16,000	1,276	12,804	1,025	10,673	422	2,663	111		1,879
D1:4	12,000	1,437	9,598	1,156	8,000	643	2,000	161		2,111
D1:5	9,598	1,347	7,688	1,075	6,392	769	1,598	196	14,070	2,251
D1:6	8,000	1,276	6,402	1,025	5,337	854	1,337	211	11,738	2,352
D1:8	6,000	1,196	4,804	965	4,000	643	1,005	161	8,804	2,462
D1:10	4,804	1,156	3,839	925	3,196	643	804	161	7,045	2,251
D1:12	4,000	1,116	3,196	864	2,663	643	663	161	5,869	2,111

This data recommendation may serve as a general guidance only. This actual cutting parameters may vary in each application. A proportional feed rate adjustment is necessary when the actual RPM is lower than the stated recommendation.

Tool Series 361 • HPC Carbide End Mills - Hard Milling

4 FLUTES | SEMI FINISHING | FINISHING | MILLING 60 HRC MATERIAL | HPC HIGH PRECISION | RMS PREMIUM FINISH | PVD SPECIAL COATING | Z SPECIAL FLUTE

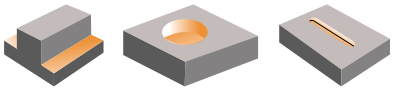

Uncoated Tool Number	Coated Tool Number	Size D1	Shank D2	O.A.L L1	L.O.C L2	Flutes Z
361-4040	361-4040-T	4	6	50	12	4
361-4060	361-4060-T	6	6	50	15	4
361-4080	361-4080-T	8	8	63	20	4
361-4100	361-4100-T	10	10	75	25	4
361-4120	361-4120-T	12	12	75	30	4

**Best Carbide recommends hard milling applications only in coated conditions.*

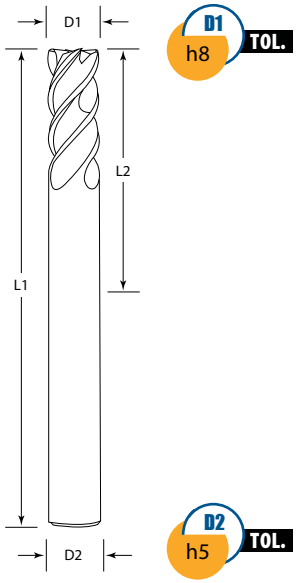

Special Tool Features and Advantages

- ★ **Unique Flute Form**
- ★ **Polished Land Width**
- ★ **Superior Grinding Finish**

Technical Information

Material:	Cast Iron		Carbon Steel		Alloy Steel		Pre-Hardened Steel		Hardened Steel	
Hardness:	150-200 HB		180-220 Hb		200-250 HB		25-35 HRC		35-50 HRC	
Cutting Depth:	axial (1) ap: 1.5D1		axial (1) ap: 1.5D1		axial (1) ap: 1.5D1		axial (1) ap: 1.5D1		axial (1) ap: 1.5D1	
	radial (-) ae: 0.1D1		radial (-) ae: 0.1D1		radial (-) ae: 0.1D1		radial (-) ae: 0.1D1		radial (-) ae: 0.1D1	
Vc (m/min):	90-100		100-110		80-90		60-70		40-50	
Speed & Feed	n	Vf	n	Vf	n	Vf	n	Vf	n	Vf
	RPM	mm/min	RPM	mm/min	RPM	mm/min	RPM	mm/min	RPM	mm/min
Slide Milling (General Conditions / for HSC up +50% / Finishing Vf - 30% to -50%)										
D1:4	7,155	736	8,350	1,565	6,760	1,373	4,770	397	3,580	268
D1:6	4,770	848	5,565	1,983	4,505	1,608	3,180	397	2,385	295
D1:8	3,580	737	4,175	1,865	3,380	1,478	2,385	616	1,790	458
D1:10	2,865	721	3,340	1,400	2,705	1,406	1,910	603	1,430	451
D1:12	2,385	674	2,783	1,100	2,255	1,288	1,590	506	1,195	398
Slotting (General Conditions / for HSC up +50% / Finishing Vf - 30% to -50%)										
D1:4	3,580	268	7,555	661	6,360	477	4,375	317	2,785	197
D1:6	2,385	295	5,053	765	4,240	668	2,915	367	1,855	267
D1:8	1,790	458	3,775	692	3,180	625	2,185	371	1,390	267
D1:10	1,430	451	3,020	624	2,545	498	1,750	339	1,115	246
D1:12	1,195	398	609	609	2,120	477	1,460	325	930	232

This data recommendation may serve as a general guidance only. This actual cutting parameters may vary in each application. A proportional feed rate adjustment is necessary when the actual RPM is lower than the stated recommendation.

**Shown uncoated (left) and coated (right) with hard coating for hardened steels ≥ 50 HRC ("T"). For more coating information please refer to page 4.*

BEST CARBIDE

Tool Series 371 • HSC Super Accuracy Carbide End Mills for Aluminum

2 FLUTES | 3 FLUTES | SEMI FINISHING | FINISHING | MILLING SOFT MATERIAL | HSC HIGH SPEED | RMS PREMIUM FINISH | PVD SPECIAL COATING | Z SPECIAL FLUTE

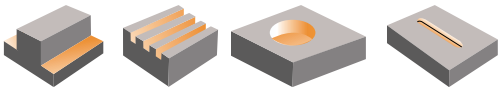

Uncoated Tool Number	Coated Tool Number	Size D1	Shank D2	O.A.L L1	L.O.C L2	Flutes Z
371-2010	371-2010-L	1	4	50	3	2
371-2020	371-2020-L	2	4	50	6	2
371-2030	371-2030-L	3	6	50	10	2
371-2040	371-2040-L	4	6	50	15	2
371-2050	371-2050-L	5	6	50	20	2
371-3050	371-3050-L	5	6	50	20	3
371-2060	371-2060-L	6	6	50	20	2
371-3060	371-3060-L	6	6	50	20	3
371-2080	371-2080-L	8	8	63	25	2
371-3080	371-3080-L	8	8	63	25	3
371-2100	371-2100-L	10	10	75	25	2
371-3100	371-3100-L	10	10	75	25	3
371-2120	371-2120-L	12	12	75	30	2
371-3120	371-3120-L	12	12	75	30	3
371-2140	371-2140-L	14	14	75	30	2
371-3140	371-3140-L	14	14	75	30	3
371-2160	371-2160-L	16	16	89	35	2
371-3160	371-3160-L	16	16	89	35	3
371-2180	371-2180-L	18	18	89	45	2
371-3180	371-3180-L	18	18	89	45	3
371-2200	371-2200-L	20	20	100	45	2
371-3200	371-3200-L	20	20	100	45	3

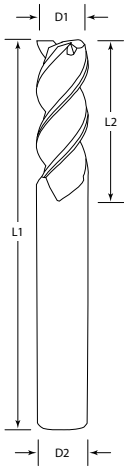

D1=D2 h5 TOL.

D1<D2 h6 TOL.

D2 h5 TOL.

Special Tool Features and Advantages

- ★ Highest Tolerance Accuracy
- ★ Polished Rake Face
- ★ Superior Grinding Finish
- ★ Highest Grinding Accuracy

Cutting Diameter	h5	h6
1 mm - 3 mm	+ 0.000 -0.004 mm	+ 0.000 -0.006 mm
> 3 mm – 6 mm	+ 0.000 -0.005 mm	+ 0.000 -0.008 mm
> 6 mm – 10 mm	+ 0.000 -0.006 mm	+ 0.000 -0.009 mm
> 10 mm – 14 mm	+ 0.000 -0.008 mm	+ 0.000 -0.011 mm
> 14 mm – 18 mm	+ 0.000 -0.008 mm	+ 0.000 -0.011 mm
> 18 mm – 20 mm	+ 0.000 -0.009 mm	+ 0.000 -0.013 mm

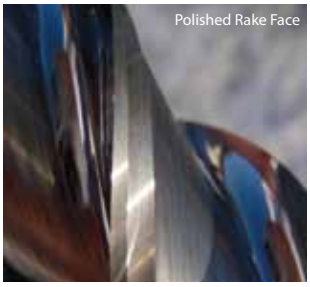

Shown uncoated (left) and coated (right) with HP coating for aluminum and non-ferrous materials ("L"). For more coating information please refer to page 4.

Tool Series 375 • HSC Super Accuracy Carbide End Mills for Aluminum – Long Length

2 FLUTES | 3 FLUTES | SEMI FINISHING | FINISHING | MILLING SOFT MATERIAL | HSC HIGH SPEED | RMS PREMIUM FINISH | PVD SPECIAL COATING | Z SPECIAL FLUTE

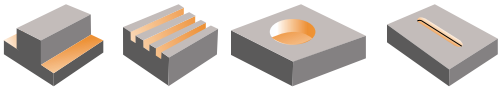

Uncoated Tool Number	Coated Tool Number	Size D1	Shank D2	O.A.L L1	L.O.C L2	Flutes Z
375-2030	375-2030-L	3	6	75	25	2
375-2040	375-2040-L	4	6	75	25	2
375-2050	375-2050-L	5	6	75	25	2
375-2060	375-2060-L	6	6	75	25	2
375-3060	375-3060-L	6	6	75	25	3
375-2080	375-2080-L	8	8	75	30	2
375-3080	375-3080-L	8	8	75	30	3
375-3100	375-3100-L	10	10	100	38	3
375-3120	375-3120-L	12	12	100	50	3
375-3160	375-3160-L	16	16	150	75	3
375-3180	375-3180-L	18	18	150	75	3
375-3200	375-3200-L	20	20	150	75	3

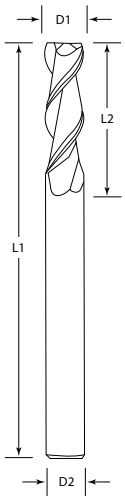

D1=D2 h5 TOL.

D1<D2 h6 TOL.

D2 h5 TOL.

Special Tool Features and Advantages

- ★ Highest Tolerance Accuracy
- ★ Polished Rake Face
- ★ Superior Grinding Finish
- ★ Highest Grinding Accuracy

Cutting Diameter	h5	h6
3 mm	+ 0.000 -0.004 mm	+ 0.000 -0.006 mm
> 3 mm – 6 mm	+ 0.000 -0.005 mm	+ 0.000 -0.008 mm
> 6 mm – 10 mm	+ 0.000 -0.006 mm	+ 0.000 -0.009 mm
> 10 mm – 14 mm	+ 0.000 -0.008 mm	+ 0.000 -0.011 mm
> 14 mm – 18 mm	+ 0.000 -0.008 mm	+ 0.000 -0.011 mm
> 18 mm – 20 mm	+ 0.000 -0.009 mm	+ 0.000 -0.013 mm

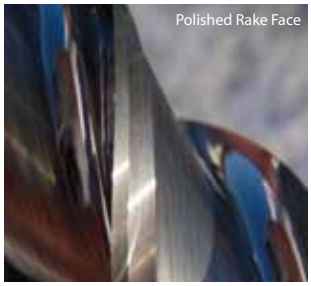

Shown uncoated (left) and coated (right) with HP coating for aluminum and non-ferrous materials ("L"). For more coating information please refer to page 4.

BEST CARBIDE

Tool Series 378 • HSC Super Accuracy Carbide End Mills for Aluminum – Extra Long Reach

3 FLUTES | SEMI FINISHING | FINISHING | MILLING SOFT MATERIAL | HSC HIGH SPEED | RMS PREMIUM FINISH | PVD SPECIAL COATING | Z SPECIAL FLUTE

Uncoated Tool Number	Coated Tool Number	Size D1	Shank D2	Neck D3	O.A.I L1	L.O.C. L2	Reach L3	Flutes Z
378-3060	**378-3060-L**	6	6	5.6	75	6	30	3
378-3080	**378-3080-L**	8	8	7.6	75	8	45	3
378-3100	**378-3100-L**	10	10	9.6	100	10	50	3
378-3120	**378-3120-L**	12	12	11.6	100	12	55	3

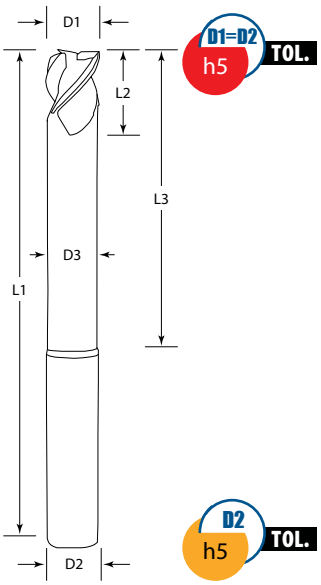

Special Tool Features and Advantages

- ★ **Highest Tolerance Accuracy**
- ★ **Polished Rake Face**
- ★ **Superior Grinding Finish**
- ★ **Highest Grinding Accuracy**

Cutting Diameter	h5
6 mm	+ 0.000 -0.005 mm
> 6 mm – 10 mm	+ 0.000 -0.006 mm
> 10 mm – 12 mm	+ 0.000 -0.008 mm

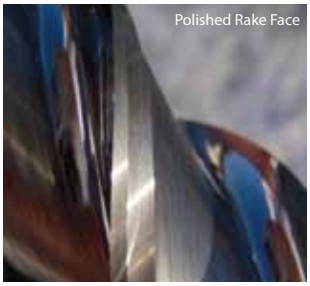

**Shown uncoated (left) and coated (right) with HP coating for aluminum and non-ferrous materials ("L"). For more coating information please refer to page 4.*

Tool Series 385 • HSC Super Accuracy Carbide End Mills for Aluminum – Stub Length

2 FLUTES | 3 FLUTES | SEMI FINISHING | FINISHING | MILLING SOFT MATERIAL | HSC HIGH SPEED | RMS PREMIUM FINISH | PVD SPECIAL COATING | Z SPECIAL FLUTE

Uncoated Tool Number	Coated Tool Number	Size D1	Shank D2	O.A.L L1	L.O.C L2	Flutes Z
385-2010	385-2010-L	1	4	50	2	2
385-2020	385-2020-L	2	4	50	3	2
385-2030	385-2030-L	3	6	50	5	2
385-3030	385-3030-L	3	6	50	5	3
385-2040	385-2040-L	4	6	50	6	2
385-3040	385-3040-L	4	6	50	6	3
385-2050	385-2050-L	5	6	50	8	2
385-3050	385-3050-L	5	6	50	8	3
385-3060	385-3060-L	6	6	50	9	3
385-3080	385-3080-L	8	8	63	12	3
385-3100	385-3100-L	10	10	75	15	3
385-3120	385-3120-L	12	12	75	18	3

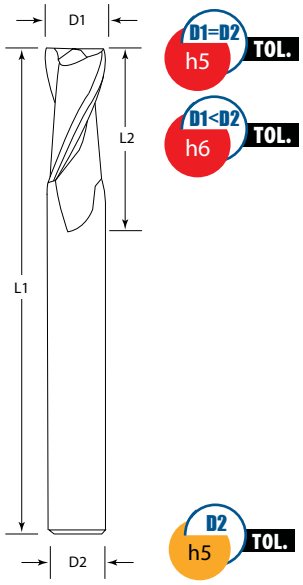

Special Tool Features and Advantages

- ★ Highest Tolerance Accuracy
- ★ Polished Rake Face
- ★ Superior Grinding Finish
- ★ Highest Grinding Accuracy

Cutting Diameter	h5	h6
1 mm – 3 mm	+ 0.000 -0.004 mm	+ 0.000 -0.006 mm
> 3 mm – 6 mm	+ 0.000 -0.005 mm	+ 0.000 -0.008 mm
> 6 mm – 10 mm	+ 0.000 -0.006 mm	+ 0.000 -0.009 mm
> 10 mm – 12 mm	+ 0.000 -0.008 mm	+ 0.000 -0.011 mm

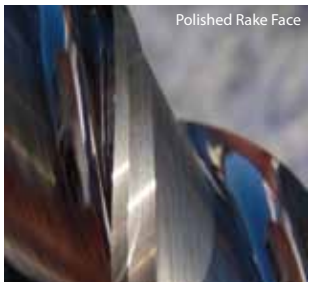

Shown uncoated (left) and coated (right) with HP coating for aluminum and non-ferrous materials ("L"). For more coating information please refer to page 4.

BEST CARBIDE

Tool Series 391 • HPC Finishing Carbide End Mills for Steel and High Temp. Alloys

Uncoated Tool # 5 Flutes	Size D1	Shank D2	O.A.L L1	L.O.C L2	*Coating Choices
391-5030	3	6	50	10	-R / -A
391-5040	4	6	50	15	-R / -A
391-5050	5	6	50	20	-R / -A
391-5060	6	6	50	20	-R / -A
391-5080	8	8	63	25	-R / -A
391-5100	10	10	75	25	-R / -A
391-5120	12	12	75	30	-R / -A
391-5140	14	14	75	30	-R / -A
391-5160	16	16	100	35	-R / -A
391-5180	18	18	100	45	-R / -A
391-5200	20	20	100	45	-R / -A

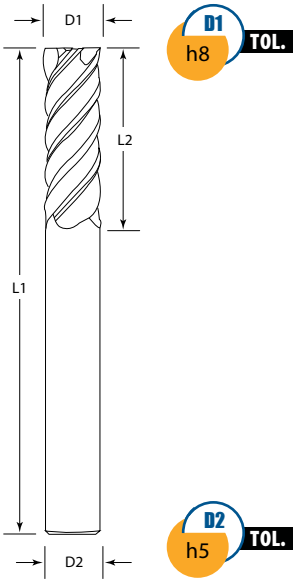

Special Tool Features and Advantages

★ **Excellent Work Piece Finishes**

★ **Multiple Coating Options**

- **"A"** AlTiN coating.
- **"R"** Nano composite.

**Shown uncoated (left) and coated (right) with AlTiN coating ("A"). Add letter "A" for AlTiN coating or letter "R" for nano composite coating. Example: 391-5000-A. For more coating information please refer to page 4.*

Tool Series 401 • HFC Carbide End Mills – Variable Helix / Offset

Uncoated Tool Number	Size D1	Shank D2	O.A.L L1	L.O.C L2	Flutes Z	*Coating Choices
401-4030	3	6	50	8	4	-R / -A
401-4040	4	6	50	11	4	-R / -A
401-4050	5	6	50	13	4	-R / -A
401-4060	6	6	50	13	4	-R / -A
401-4080	8	8	63	19	4	-R / -A
401-4100	10	10	75	22	4	-R / -A
401-4120	12	12	75	26	4	-R / -A
401-4140	14	14	75	26	4	-R / -A
401-4160	16	16	89	32	4	-R / -A
401-4180	18	18	89	36	4	-R / -A
401-4200	20	20	100	38	4	-R / -A

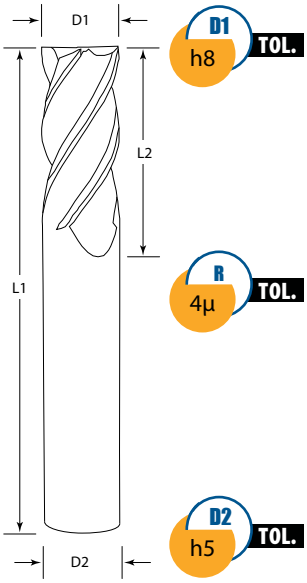

Special Tool Features and Advantages

- ★ **Reduced Harmonics and Vibrations**
- ★ **Unique Flute Form**
- ★ **Polished Land Width**
- ★ **Multiple Coating Options**
  - **"A"** AlTiN coating.
  - **"R"** Nano composite.

**Shown uncoated (left) and coated (right) with AlTiN coating ("A"). Add letter "A" for AlTiN coating or letter "R" for nano composite coating. Example: 401-4000-A. For more coating information please refer to page 4.*

BEST CARBIDE

Tool Series 411 • HFC Finishing Carbide End Mills for Stainless Steel– Variable Helix / Offset

Uncoated Tool # 4 Flutes	Coated Tool # 4 Flutes	Size D1	Shank D2	O.A.L L1	L.O.C L2	Flutes Z	*Coating Choices
411-4030	411-4030-D	3	6	50	8	4	-D / -A
411-4040	411-4040-D	4	6	50	11	4	-D / -A
411-4050	411-4050-D	5	6	50	13	4	-D / -A
411-4060	411-4060-D	6	6	50	13	4	-D / -A
411-4080	411-4080-D	8	8	63	19	4	-D / -A
411-4100	411-4100-D	10	10	75	22	4	-D / -A
411-4120	411-4120-D	12	12	75	26	4	-D / -A
411-4140	411-4140-D	14	14	75	26	4	-D / -A
411-4160	411-4160-D	16	16	89	32	4	-D / -A
411-4200	411-4200-D	20	20	100	38	4	-D / -A

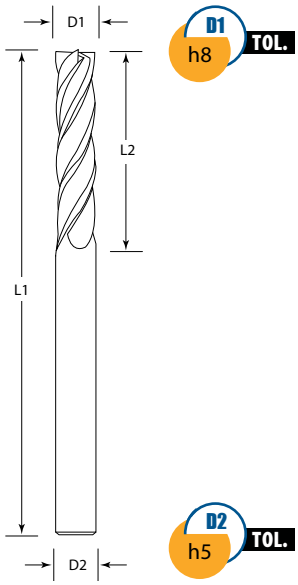

Special Tool Features and Advantages

- ★ **Reduced Harmonics and Vibrations**
- ★ **Unique Flute Form**
- ★ **Polished Land Width**
- ★ **Multiple Coating Options**
  - **"A"** AlTiN coating.
  - **"D"** HP coating recommended for stainless steels, titanium and high temperature alloys.

**Shown uncoated (left) and coated (right) with HP coating for stainless steels, titanium and hihg temperature alloys ("D"). Add letter "A" for AlTiN coating, or letter "D" for HP coating for stainless steels and high temperature alloys. Example: 411-4000-A. For more coating information please refer to page 4.*

Corner Radius • Universal and High Performance Carbide End Mills

CR corner radius

Best Carbide manufactures a complete line of corner radii universal and high performance end mills. The size range starts with the smallest cutting diameter of 0.2 mm and ends at a cutting diameter of 20 mm. Small size increments, various lengths of cut choices and multiple corner radii options per diameter as well as a full range different overall length options ensure that you will easily find the right end mill for your application. The comprehensive product line consists of a complete line of miniature (micro), universal application and high performance end mills, providing you with the best choice for a broad machining range and / or to achieve the highest productivity rates in a specific milling application. All high performance corner radii end mills feature a very accurate radius form with a close radius tolerance of +/- 4 µm.

Our end mills feature the following performance factors:

- **Optimized Carbide Grades**
  (fine, submicron, ultra fine and nano grades)
- **Highly Innovative Tool Geometries**
  (optimized rake, clearance and helix angles, variable helix and variable flute offsets)
- **Superior Grinding Finish & Dimensional Accuracy**
  (excellent shank & flute concentricity, smooth cutting edge quality, precise and consistent tool geometries)
- **Advanced Tool Coating Technologies**
  (full range of standard and specialized coatings)
- **Largest Range of Corner Radii**
  (0.05 / 0.1 / 0.2 / 0.5 / 1.0 / 2.0)

Tool Series 339 • HSC Miniature Carbide End Mills for Aluminum – Long Reach

Uncoated Tool Number	Coated Tool Number	Size D1	Shank D2	Neck D3	O.A.L L1	L.O.C. L2	Reach L3	Corner Radius	Flutes Z
339-2002-05-005	339-2002-05-005-L	0.2	4	0.17	45	0.15	0.5	0.05	2
339-2002-1-005	339-2002-1-005-L	0.2	4	0.17	45	0.15	1	0.05	2
339-2003-1-005	339-2003-1-005-L	0.3	4	0.27	45	0.24	1	0.05	2
339-2003-2-005	339-2003-2-005-L	0.3	4	0.27	45	0.24	2	0.05	2
339-2004-2-01	339-2004-2-01-L	0.4	4	0.37	45	0.3	2	0.1	2
339-2004-3-01	339-2004-3-01-L	0.4	4	0.37	45	0.3	3	0.1	2
339-2004-4-01	339-2004-4-01-L	0.4	4	0.37	45	0.3	4	0.1	2
339-2005-3-01	339-2005-3-01-L	0.5	4	0.47	45	0.35	3	0.1	2
339-2005-4-01	339-2005-4-01-L	0.5	4	0.47	45	0.35	4	0.1	2
339-2005-5-01	339-2005-5-01-L	0.5	4	0.47	45	0.35	5	0.1	2
339-2005-6-01	339-2005-6-01-L	0.5	4	0.47	45	0.35	6	0.1	2
339-2005-8-01	339-2005-8-01-L	0.5	4	0.47	45	0.35	8	0.1	2
339-2005-10-01	339-2005-10-01-L	0.5	4	0.47	45	0.35	10	0.1	2
339-2006-4-01	339-2006-4-01-L	0.6	4	0.57	45	0.4	4	0.1	2
339-2006-6-01	339-2006-6-01-L	0.6	4	0.57	45	0.4	6	0.1	2
339-2006-8-01	339-2006-8-01-L	0.6	4	0.57	45	0.4	8	0.1	2
339-2006-10-01	339-2006-10-01-L	0.6	4	0.57	45	0.4	10	0.1	2
339-2006-12-01	339-2006-12-01-L	0.6	4	0.57	53	0.4	12	0.1	2
339-2008-4-02	339-2008-4-02-L	0.8	4	0.77	45	0.5	4	0.2	2
339-2008-6-02	339-2008-6-02-L	0.8	4	0.77	45	0.5	6	0.2	2
339-2008-8-02	339-2008-8-02-L	0.8	4	0.77	45	0.5	8	0.2	2
339-2008-10-02	339-2008-10-02-L	0.8	4	0.77	45	0.5	10	0.2	2
339-2008-12-02	339-2008-12-02-L	0.8	4	0.77	53	0.5	12	0.2	2
339-2008-16-02	339-2008-16-02-L	0.8	4	0.77	53	0.5	16	0.2	2
339-2010-4-02	339-2010-4-02-L	1	4	0.94	45	0.8	4	0.2	2
339-2010-6-02	339-2010-6-02-L	1	4	0.94	45	0.8	6	0.2	2
339-2010-8-02	339-2010-8-02-L	1	4	0.94	45	0.8	8	0.2	2
339-2010-10-02	339-2010-10-02-L	1	4	0.94	45	0.8	10	0.2	2
339-2010-12-02	339-2010-12-02-L	1	4	0.94	53	0.8	12	0.2	2
339-2010-16-02	339-2010-16-02-L	1	4	0.94	53	0.8	16	0.2	2
339-2010-20-02	339-2010-20-02-L	1	4	0.94	63	0.8	20	0.2	2
339-2012-6-02	339-2012-6-02-L	1.2	4	1.14	45	1	6	0.2	2
339-2012-8-02	339-2012-8-02-L	1.2	4	1.14	45	1	8	0.2	2

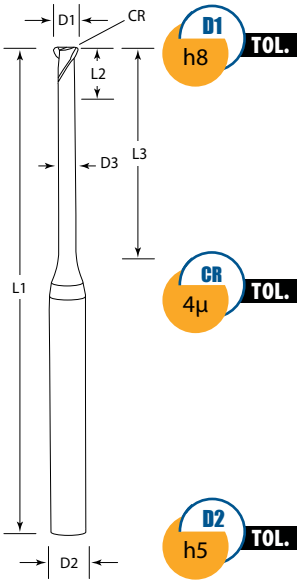

Special Tool Features and Advantages

- ★ Radius Tolerance of ± 0.00 4mm
- ★ Highest Grinding Accuracy
- ★ Superior Grinding Finish
- ★ Special Neck Form for Greater Reach

Shown uncoated (left) and coated (right) with HP coating for aluminum and non-ferrous materials ("L"). For more coating information please refer to page 4.

Tool Series 339 • HSC Miniature Carbide End Mills for Aluminum – Long Reach

2 FLUTES | SEMI FINISHING | FINISHING | RIB MINATURE | MILLING SOFT MATERIAL | HSC HIGH SPEED

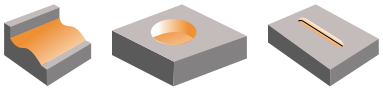

Uncoated Tool Number	Coated Tool Number	Size D1	Shank D2	Neck D3	O.A.L L1	L.O.C. L2	Reach L3	Corner Radius	Flutes Z
339-2012-10-02	339-2012-10-02-L	1.2	4	1.14	45	1	10	0.2	2
339-2012-12-02	339-2012-12-02-L	1.2	4	1.14	53	1	12	0.2	2
339-2012-16-02	339-2012-16-02-L	1.2	4	1.14	53	1	16	0.2	2
339-2012-20-02	339-2012-20-02-L	1.2	4	1.14	63	1	20	0.2	2
339-2015-8-02	339-2015-8-02-L	1.5	4	1.42	45	1.2	8	0.2	2
339-2015-12-02	339-2015-12-02-L	1.5	4	1.42	53	1.2	12	0.2	2
339-2015-16-02	339-2015-16-02-L	1.5	4	1.42	53	1.2	16	0.2	2
339-2015-20-02	339-2015-20-02-L	1.5	4	1.42	63	1.2	20	0.2	2
339-2015-25-02	339-2015-25-02-L	1.5	4	1.42	63	1.2	25	0.2	2
339-2020-8-02	339-2020-8-02-L	2	4	1.92	45	1.35	8	0.2	2
339-2020-8-05	339-2020-8-05-L	2	4	1.92	45	1.6	8	0.5	2
339-2020-12-02	339-2020-12-02-L	2	4	1.92	53	1.6	12	0.2	2
339-2020-12-05	339-2020-12-05-L	2	4	1.92	53	1.6	12	0.5	2
339-2020-16-02	339-2020-16-02-L	2	4	1.92	53	1.6	16	0.2	2
339-2020-16-05	339-2020-16-05-L	2	4	1.92	53	1.6	16	0.5	2
339-2020-20-02	339-2020-20-02-L	2	4	1.92	63	1.6	20	0.2	2
339-2020-20-05	339-2020-20-05-L	2	4	1.92	63	1.6	20	0.5	2
339-2020-25-02	339-2020-25-02-L	2	4	1.92	63	1.6	25	0.2	2
339-2020-25-05	339-2020-25-05-L	2	4	1.92	63	1.6	25	0.5	2
339-2020-30-02	339-2020-30-02-L	2	4	1.92	75	1.6	30	0.2	2
339-2020-30-05	339-2020-30-05-L	2	4	1.92	75	1.6	30	0.5	2
339-2030-8-02	339-2030-8-02-L	3	6	2.86	50	2.4	8	0.2	2
339-2030-8-05	339-2030-8-05-L	3	6	2.86	50	2.4	8	0.5	2
339-2030-12-02	339-2030-12-02-L	3	6	2.86	63	2.4	12	0.2	2
339-2030-12-05	339-2030-12-05-L	3	6	2.86	63	2.4	12	0.5	2
339-2030-16-02	339-2030-16-02-L	3	6	2.86	63	2.4	16	0.2	2
339-2030-16-05	339-2030-16-05-L	3	6	2.86	63	2.4	16	0.5	2
339-2030-20-02	339-2030-20-02-L	3	6	2.86	63	2.4	20	0.2	2
339-2030-20-05	339-2030-20-05-L	3	6	2.86	63	2.4	20	0.5	2
339-2030-25-02	339-2030-25-02-L	3	6	2.86	63	2.4	25	0.2	2
339-2030-25-05	339-2030-25-05-L	3	6	2.86	63	2.4	25	0.5	2
339-2030-30-02	339-2030-30-02-L	3	6	2.86	75	2.4	30	0.2	2
339-2030-30-05	339-2030-30-05-L	3	6	2.86	75	2.4	30	0.5	2

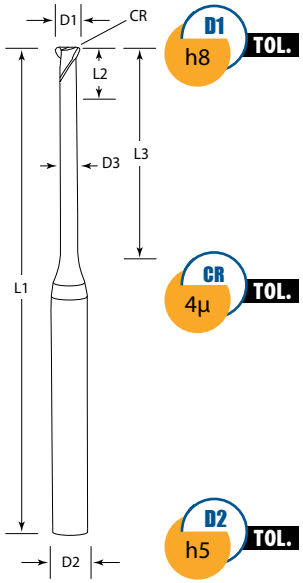

Special Tool Features and Advantages

- ★ Radius Tolerance of ± 0.004 mm
- ★ Highest Grinding Accuracy
- ★ Superior Grinding Finish
- ★ Special Neck Form for Greater Reach

Shown uncoated (left) and coated (right) with HP coating for aluminum and non-ferrous materials ("L"). For more coating information please refer to page 4.

Tool Series 342 • HSC Miniature Hard Milling Carbide End Mills – Long Reach

2 FLUTES | SEMI FINISHING | FINISHING | RIB MINATURE | MILLING 70 HRC MATERIAL | HSC HIGH SPEED | PVD SPECIAL COATING

Uncoated Tool Number	Coated Tool Number	Size D1	Shank D2	Neck D3	O.A.L L1	L.O.C. L2	Reach L3	Corner Radius	Flutes Z
342-2002-05	342-2002-05-T	0.2	4	0.17	45	0.15	0.5	0.05	2
342-2002-1	342-2002-1-T	0.2	4	0.17	45	0.15	1.0	0.05	2
342-2003-1	342-2003-1-T	0.3	4	0.27	45	0.24	1.0	0.05	2
342-2003-2	342-2003-2-T	0.3	4	0.27	45	0.24	2.0	0.05	2
342-2004-2	342-2004-2-T	0.4	4	0.37	45	0.30	2.0	0.10	2
342-2004-3	342-2004-3-T	0.4	4	0.37	45	0.30	3.0	0.10	2
342-2004-4	342-2004-4-T	0.4	4	0.37	45	0.30	4.0	0.10	2
342-2005-3	342-2005-3-T	0.5	4	0.47	45	0.35	3.0	0.10	2
342-2005-4	342-2005-4-T	0.5	4	0.47	45	0.35	4.0	0.10	2
342-2005-5	342-2005-5-T	0.5	4	0.47	45	0.35	5.0	0.10	2
342-2005-6	342-2005-6-T	0.5	4	0.47	45	0.35	6.0	0.10	2
342-2005-8	342-2005-8-T	0.5	4	0.47	45	0.35	8.0	0.10	2
342-2005-10	342-2005-10-T	0.5	4	0.47	45	0.35	10.0	0.10	2
342-2006-4	342-2006-4-T	0.6	4	0.57	45	0.40	4.0	0.10	2
342-2006-6	342-2006-6-T	0.6	4	0.57	45	0.40	6.0	0.10	2
342-2006-8	342-2006-8-T	0.6	4	0.57	45	0.40	8.0	0.10	2
342-2006-10	342-2006-10-T	0.6	4	0.57	45	0.40	10.0	0.10	2
342-2006-12	342-2006-12-T	0.6	4	0.57	53	0.40	12.0	0.10	2
342-2008-4	342-2008-4-T	0.8	4	0.77	45	0.50	4.0	0.20	2
342-2008-6	342-2008-6-T	0.8	4	0.77	45	0.50	6.0	0.20	2
342-2008-8	342-2008-8-T	0.8	4	0.77	45	0.50	8.0	0.20	2
342-2008-10	342-2008-10-T	0.8	4	0.77	45	0.50	10.0	0.20	2
342-2008-12	342-2008-12-T	0.8	4	0.77	53	0.50	12.0	0.20	2
342-2008-16	342-2008-16-T	0.8	4	0.77	53	0.50	16.0	0.20	2
342-2010-4	342-2010-4-T	1	4	0.94	45	0.80	4.0	0.20	2
342-2010-6	342-2010-6-T	1	4	0.94	45	0.80	6.0	0.20	2
342-2010-8	342-2010-8-T	1	4	0.94	45	0.80	8.0	0.20	2
342-2010-10	342-2010-10-T	1	4	0.94	45	0.80	10.0	0.20	2
342-2010-12	342-2010-12-T	1	4	0.94	53	0.80	12.0	0.20	2
342-2010-16	342-2010-16-T	1	4	0.94	53	0.80	16.0	0.20	2
342-2010-20	342-2010-20-T	1	4	0.94	63	0.80	20.0	0.20	2
342-2012-6	342-2012-6-T	1.2	4	1.14	45	1.00	6.0	0.20	2
342-2012-8	342-2012-8-T	1.2	4	1.14	45	1.00	8.0	0.20	2

**Best Carbide recommends hard milling applications only in coated conditions.*

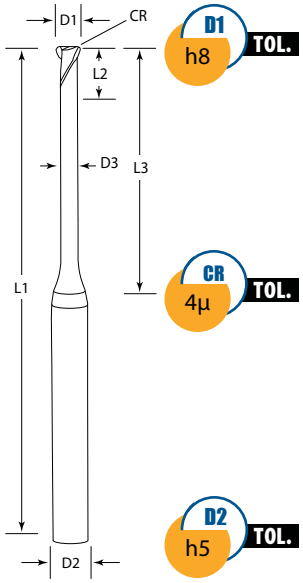

Special Tool Features and Advantages

★ **Radius Tolerance of ± 0.004 mm** ★ **Special Neck Form for Greater Reach** ★ **Superior Grinding Finish**

**Shown uncoated (left) and coated (right) with hard coating for hardened steels ≥ 50 HRC ("T"). For more coating information please refer to page 4.*

Tool Series 342 • HSC Miniature Hard Milling Carbide End Mills – Long Reach

2 FLUTES | SEMI FINISHING | FINISHING | RIB MINATURE | MILLING 70 HRC MATERIAL | HSC HIGH SPEED | PVD SPECIAL COATING

Uncoated Tool Number	Coated Tool Number	Size D1	Shank D2	Neck D3	O.A.L L1	L.O.C. L2	Reach L3	Corner Radius	Flutes Z
342-2012-10	342-2012-10-T	1.2	4	1.14	45	1.00	10.0	0.20	2
342-2012-12	342-2012-12-T	1.2	4	1.14	53	1.00	12.0	0.20	2
342-2012-16	342-2012-16-T	1.2	4	1.14	53	1.00	16.0	0.20	2
342-2012-20	342-2012-20-T	1.2	4	1.14	63	1.00	20.0	0.20	2
342-2015-8	342-2015-8-T	1.5	4	1.42	45	1.20	8.0	0.20	2
342-2015-12	342-2015-12-T	1.5	4	1.42	53	1.20	12.0	0.20	2
342-2015-16	342-2015-16-T	1.5	4	1.42	53	1.20	16.0	0.20	2
342-2015-20	342-2015-20-T	1.5	4	1.42	63	1.20	20.0	0.20	2
342-2015-25	342-2015-25-T	1.5	4	1.42	63	1.20	25.0	0.20	2
342-2020-8-02	342-2020-8-02-T	2	4	1.92	45	1.60	8.0	0.20	2
342-2020-8-05	342-2020-8-05-T	2	4	1.92	45	1.60	8.0	0.50	2
342-2020-12-02	342-2020-12-02-T	2	4	1.92	53	1.60	12.0	0.20	2
342-2020-12-05	342-2020-12-05-T	2	4	1.92	53	1.60	12.0	0.50	2
342-2020-16-02	342-2020-16-02-T	2	4	1.92	53	1.60	16.0	0.20	2
342-2020-16-05	342-2020-16-05-T	2	4	1.92	53	1.60	16.0	0.50	2
342-2020-20-02	342-2020-20-02-T	2	4	1.92	63	1.60	20.0	0.20	2
342-2020-20-05	342-2020-20-05-T	2	4	1.92	63	1.60	20.0	0.50	2
342-2020-25-02	342-2020-25-02-T	2	4	1.92	63	1.60	25.0	0.20	2
342-2020-25-05	342-2020-25-05-T	2	4	1.92	63	1.60	25.0	0.50	2
342-2020-30-02	342-2020-30-02-T	2	4	1.92	75	1.60	30.0	0.20	2
342-2020-30-05	342-2020-30-05-T	2	4	1.92	75	1.60	30.0	0.50	2
342-2030-8-02	342-2030-8-02-T	3	6	2.86	50	2.40	8.0	0.20	2
342-2030-8-05	342-2030-8-05-T	3	6	2.86	50	2.40	8.0	0.50	2
342-2030-12-02	342-2030-12-02-T	3	6	2.86	63	2.40	12.0	0.20	2
342-2030-12-05	342-2030-12-05-T	3	6	2.86	63	2.40	12.0	0.50	2
342-2030-16-02	342-2030-16-02-T	3	6	2.86	63	2.40	16.0	0.20	2
342-2030-16-05	342-2030-16-05-T	3	6	2.86	63	2.40	16.0	0.50	2
342-2030-20-02	342-2030-20-02-T	3	6	2.86	63	2.40	20.0	0.20	2
342-2030-20-05	342-2030-20-05-T	3	6	2.86	63	2.40	20.0	0.50	2
342-2030-25-02	342-2030-25-02-T	3	6	2.86	63	2.40	25.0	0.20	2
342-2030-25-05	342-2030-25-05-T	3	6	2.86	63	2.40	25.0	5.00	2
342-2030-30-02	342-2030-30-02-T	3	6	2.86	75	2.40	30.0	0.20	2
342-2030-30-05	342-2030-30-05-T	3	6	2.86	75	2.40	30.0	0.50	2

**Best Carbide recommends hard milling applications only in coated conditions.*

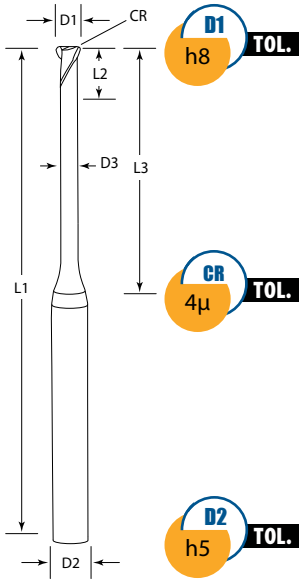

Special Tool Features and Advantages

★ **Radius Tolerance of ± 0.004 mm** ★ **Special Neck Form for Greater Reach** ★ **Superior Grinding Finish**

**Shown uncoated (left) and coated (right) with hard coating for hardened steels ≥ 50 HRC ("T"). For more coating information please refer to page 4.*

Tool Series 342 • Technical Support

Material			Copper			Carbon Steel (180-250 HB			Stainless Steel (25-35 HRC)		
D1 mm	L3 mm	CR mm	ap mm	n min.	Vf mm/min	ap mm	n min.	Vf mm/min.	ap mm	n min.	Vf mm/min
0.2	0.5	0.05	0.024	50,100	1,443	0.02	50,100	1,443	0.018	45,090	1,299
0.2	1	0.05	0.017	50,100	1,443	0.014	50,100	1,443	0.013	45,090	1,299
0.3	1	0.05	0.025	50,100	1,891	0.021	48,096	1,818	0.019	43,286	1,636
0.3	2	0.05	0.014	50,100	1,735	0.012	43,286	1,496	0.011	38,958	1,347
0.4	2	0.1	0.034	48,096	1,847	0.028	40,080	1,539	0.025	36,072	1,385
0.4	3	0.1	0.019	43,286	1,496	0.016	36,072	1,246	0.014	32,465	1,122
0.4	4	0.1	0.012	43,286	1,496	0.01	36,072	1,246	0.009	32,465	1,122
0.5	3	0.1	0.024	41,555	1,915	0.02	34,629	1,596	0.018	31,166	1,436
0.5	4	0.1	0.024	41,555	1,915	0.02	34,629	1,596	0.018	31,166	1,436
0.5	5	0.1	0.016	41,555	1,915	0.013	34,629	1,596	0.012	31,166	1,436
0.5	6	0.1	0.016	36,938	1,489	0.013	30,781	1,241	0.012	27,703	1,117
0.5	8	0.1	0.015	36,938	1,489	0.013	30,781	1,241	0.012	27,703	1,117
0.5	10	0.1	0.012	27,620	997	0.011	28,056	1,012	0.01	24,860	902
0.6	4	0.1	0.029	41,555	2,394	0.024	34,629	1,995	0.022	31,166	1,796
0.6	6	0.1	0.018	41,555	2,394	0.015	34,629	1,995	0.014	31,166	1,796
0.6	8	0.1	0.018	41,555	2,394	0.015	34,629	1,995	0.014	31,166	1,796
0.6	10	0.1	0.016	41,501	2,241	0.012	31,869	1,723	0.011	28,682	1,548
0.6	12	0.1	0.016	41,501	2,241	0.012	31,869	1,723	0.011	28,682	1,548
0.8	4	0.2	0.067	48,096	2,309	0.056	40,080	1,924	0.05	36,072	1,731
0.8	6	0.2	0.038	43,286	1,870	0.032	36,072	1,558	0.029	32,465	1,403
0.8	8	0.2	0.038	43,286	1,870	0.032	36,072	1,558	0.029	32,465	1,403
0.8	10	0.2	0.036	41,828	1,844	0.03	34,669	1,528	0.027	31,072	1,368
0.8	12	0.2	0.032	40,636	1,628	0.026	33,467	1,343	0.024	29,880	1,197
0.8	16	0.2	0.028	40,636	1,463	0.022	33,467	1,207	0.02	29,880	1,077
1	4	0.2	0.084	43,286	3,116	0.07	36,072	2,597	0.063	32,465	2,338
1	6	0.2	0.048	38,958	2,524	0.04	32,465	2,104	0.036	29,218	1,894
1	8	0.2	0.048	38,958	2,524	0.04	32,465	2,104	0.036	29,218	1,894
1	10	0.2	0.03	38,958	2,524	0.025	32,465	2,104	0.023	29,218	1,894
1	12	0.2	0.03	34,629	1,995	0.025	28,858	1,662	0.023	25,972	1,496
1	16	0.2	0.018	34,629	1,745	0.015	28,858	1,445	0.014	25,972	1,309
1	20	0.2	0.012	25,972	1,309	0.01	21,643	1,091	0.009	19,479	982
1.2	6	0.2	0.078	39,840	2,710	0.064	33,727	2,295	0.057	31,062	2,114
1.2	8	0.2	0.078	39,840	2,390	0.064	33,727	2,024	0.057	31,062	1,864
1.2	10	0.2	0.038	36,388	2,184	0.024	30,275	1,819	0.017	27,625	1,658
1.2	12	0.2	0.038	36,388	2,184	0.024	30,275	1,819	0.017	27,625	1,658
1.2	16	0.2	0.025	32,665	1,703	0.019	26,558	1,383	0.014	23,908	1,242
1.2	20	0.2	0.019	25,496	1,328	0.014	20,716	1,077	0.012	18,061	942
1.5	8	0.2	0.072	30,300	1,964	0.06	25,250	1,636	0.054	22,725	1,473
1.5	12	0.2	0.072	30,300	1,964	0.06	25,250	1,636	0.054	22,725	1,473
1.5	15	0.2	0.046	26,934	1,551	0.038	22,445	1,293	0.034	20,200	1,163
1.5	20	0.2	0.046	26,934	1,551	0.038	22,445	1,293	0.034	20,200	1,163
1.5	25	0.2	0.032	22,310	1,160	0.024	18,061	942	0.02	15,932	832
2	8	0.2	0.168	25,250	3,409	0.14	21,042	2,841	0.126	18,938	2,557
2	8	0.5	0.168	25,250	3,788	0.14	21,042	3,156	0.126	18,938	2,841
2	12	0.2	0.096	22,725	2,762	0.08	18,938	2,301	0.072	17,044	2,071
2	12	0.5	0.096	22,725	3,068	0.08	18,938	2,557	0.072	17,044	2,301
2	16	0.2	0.096	22,725	2,762	0.08	18,938	2,301	0.072	17,044	2,071
2	16	0.5	0.096	22,725	3,068	0.08	18,938	2,557	0.072	17,044	2,301
2	20	0.2	0.06	22,725	2,762	0.05	18,938	2,301	0.045	17,044	2,071
2	20	0.5	0.06	22,725	3,068	0.05	18,938	2,557	0.045	17,044	2,301
2	25	0.2	0.04	19,759	2,295	0.03	15,932	1,849	0.025	14,183	1,648
2	25	0.5	0.04	19,759	2,570	0.03	15,932	2,074	0.025	14,183	1,844
2	30	0.2	0.03	19,759	2,295	0.02	15,932	1,849	0.015	14,183	1,648
2	30	0.5	0.03	19,759	2,570	0.02	15,932	2,074	0.015	14,183	1,844
3	8	0.2	0.361	19,238	2,597	0.301	16,032	2,164	0.271	14,429	1,948
3	8	0.5	0.361	19,238	2,886	0.301	16,032	2,405	0.271	14,429	2,164
3	12	0.2	0.253	19,238	2,597	0.21	16,032	2,164	0.189	14,429	1,948
3	12	0.5	0.253	19,238	2,886	0.21	16,032	2,405	0.189	14,429	2,164
3	16	0.2	0.144	19,238	2,597	0.12	16,032	2,164	0.108	14,429	1,948
3	16	0.5	0.144	19,238	2,886	0.12	16,032	2,405	0.108	14,429	2,164
3	20	0.2	0.144	17,315	2,104	0.12	14,429	1,754	0.108	12,986	1,578
3	20	0.5	0.144	17,315	2,338	0.12	14,429	1,948	0.108	12,986	1,754
3	30	0.2	0.096	17,315	2,104	0.08	14,429	1,754	0.072	12,986	1,578
3	30	0.5	0.096	17,315	2,338	0.08	14,429	1,948	0.072	12,986	1,754
3	30	0.2	0.096	17,315	2,104	0.08	14,429	1,754	0.072	12,986	1,578
3	30	0.5	0.096	17,315	2,338	0.08	14,429	1,948	0.072	12,986	1,754

This data recommendation applies to highly accurate and rigid machining conditions associated with HSC. It may serve as a general guidance only. The actual cutting parameters may very with each application. A proportional feed rate adjustment is necessary when the actual RPM is lower than the stated recommendation.

Tool Series 342 • Technical Support

Material			Steels (35-45 HRC)			Hardened Steels (45-55 HRC)			Hardened Steels (55-70 HRC)		
D1 mm	L3 mm	CR mm	ap mm	n min.	Vf mm/min	ap mm	n min.	Vf mm/min.	ap mm	n min.	Vf mm/min
0.2	0.5	0.05	0.016	42,585	1,104	0.013	37,575	866	0.012	35,070	707
0.2	1	0.05	0.011	42,585	1,104	0.009	37,575	866	0.008	35,070	707
0.3	1	0.05	0.017	40,882	1,148	0.014	36,072	857	0.013	33,667	690
0.3	2	0.05	0.01	36,793	1,033	0.008	32,465	772	0.007	30,300	622
0.4	2	0.1	0.022	34,068	1,177	0.018	30,060	924	0.017	28,056	755
0.4	3	0.1	0.013	30,661	1,060	0.01	27,054	831	0.01	25,250	678
0.4	4	0.1	0.008	30,661	1,060	0.007	27,054	831	0.006	25,250	678
0.5	3	0.1	0.016	29,435	1,102	0.013	25,972	823	0.012	24,240	663
0.5	4	0.1	0.016	29,435	1,102	0.013	25,972	823	0.012	24,240	663
0.5	5	0.1	0.01	29,435	1,102	0.008	25,972	823	0.008	24,240	663
0.5	6	0.1	0.01	64,164	715	0.008	23,086	631	0.008	21,547	496
0.5	8	0.1	0.004	26,164	715	0.002	23,086	631	0.002	21,547	496
0.5	10	0.1	0.004	24,860	596	0.002	21,042	506	0.002	19,123	396
0.6	4	0.1	0.019	29,435	1,378	0.016	25,972	1,028	0.014	24,240	829
0.6	6	0.1	0.012	29,435	1,378	0.01	25,972	1,028	0.009	24,240	829
0.6	8	0.1	0.006	26,558	957	0.005	22,846	777	0.005	21,247	595
0.6	10	0.1	0.006	23,903	765	0.005	20,190	606	0.005	18,592	446
0.6	12	0.1	0.004	21,247	595	0.002	17,535	455	0.002	15,937	321
0.8	4	0.2	0.045	34,068	1,472	0.036	30,060	1,154	0.034	28,056	943
0.8	6	0.2	0.026	30,661	1,325	0.021	27,054	1,039	0.019	25,250	849
0.8	8	0.2	0.041	23,467	1,503	0.038	21,778	1,263	0.037	20,451	1,022
0.8	10	0.2	0.036	23,467	1,503	0.034	21,778	1,263	0.033	20,451	1,022
0.8	12	0.2	0.03	23,467	1,503	0.028	21,778	1,263	0.027	20,451	1,022
0.8	16	0.2	0.028	22,575	1,132	0.024	18,858	942	0.023	17,535	772
1	4	0.2	0.056	30,661	1,987	0.046	27,054	1,558	0.042	25,250	1,273
1	6	0.2	0.032	27,595	1,789	0.026	24,349	1,403	0.024	22,725	1,145
1	8	0.2	0.032	27,595	1,789	0.026	24,349	1,403	0.024	22,725	1,145
1	10	0.2	0.02	27,595	1,789	0.016	24,349	1,403	0.015	22,725	1,145
1	12	0.2	0.02	24,529	1,236	0.016	21,643	1,091	0.015	20,200	873
1	16	0.2	0.012	24,529	1,148	0.01	21,643	935	0.009	20,200	727
1	20	0.2	0.008	18,397	861	0.007	16,323	701	0.006	15,150	545
1.2	6	0.2	0.041	23,467	1,503	0.038	21,778	1,263	0.037	20,451	1,022
1.2	8	0.2	0.036	23,467	1,503	0.034	21,778	1,263	0.033	20,451	1,022
1.2	10	0.2	0.03	23,467	1,503	0.028	21,778	1,263	0.027	20,451	1,022
1.2	12	0.2	0.028	22,575	1,132	0.024	18,858	942	0.023	17,535	772
1.2	16	0.2	0.02	22,575	1,132	0.018	18,858	832	0.017	17,535	631
1.2	20	0.2	0.018	21,242	977	0.014	17,595	772	0.013	16,202	586
1.5	8	0.2	0.048	21,463	1,391	0.039	18,938	1,091	0.036	17,675	891
1.5	12	0.2	0.048	21,463	1,391	0.039	18,938	1,091	0.036	17,675	891
1.5	15	0.2	0.03	19,078	962	0.025	16,834	849	0.023	15,711	678
1.5	20	0.2	0.03	19,078	962	0.025	16,834	849	0.023	15,711	678
1.5	25	0.2	0.02	15,308	581	0.015	13,181	501	0.013	12,118	388
2	8	0.2	0.112	17,886	2,415	0.091	15,782	1,704	0.084	14,729	1,392
2	8	0.5	0.112	17,886	2,683	0.091	15,782	1,894	0.084	14,729	1,547
2	12	0.2	0.064	16,097	1,956	0.052	14,203	1,534	0.048	13,256	1,253
2	12	0.5	0.064	16,097	2,173	0.052	14,203	1,704	0.048	13,256	1,392
2	16	0.2	0.064	16,097	1,956	0.052	14,203	1,534	0.048	13,256	1,253
2	16	0.5	0.064	16,097	2,173	0.052	14,203	1,704	0.048	13,256	1,392
2	20	0.2	0.04	16,097	1,956	0.033	14,203	1,534	0.03	13,256	1,253
2	20	0.5	0.04	16,097	2,173	0.033	14,203	1,704	0.03	13,256	1,392
2	25	0.2	0.02	13,873	1,526	0.018	12,118	1,163	0.017	11,161	915
2	25	0.5	0.02	13,873	1,720	0.018	12,118	1,309	0.017	11,161	1,049
2	30	0.2	0.015	13,873	1,526	0.01	12,118	1,163	0.008	11,161	915
2	30	0.5	0.015	13,873	1,720	0.01	12,118	1,309	0.08	11,161	1,049
3	8	0.2	0.24	13,627	1,840	0.195	12,024	1,299	0.18	11,222	1,060
3	8	0.5	0.24	13,627	2,044	0.195	12,024	1,443	0.18	11,222	1,178
3	12	0.2	0.168	13,627	1,840	0.137	12,024	1,299	0.126	11,222	1,060
3	12	0.5	0.168	13,627	2,044	0.137	12,024	1,443	0.126	11,222	1,178
3	16	0.2	0.096	13,627	1,840	0.078	12,024	1,299	0.072	11,222	1,060
3	16	0.5	0.096	13,627	2,044	0.078	12,024	1,443	0.072	11,222	1,178
3	20	0.2	0.096	12,264	1,490	0.078	10,822	1,168	0.072	10,100	955
3	20	0.5	0.096	12,264	1,655	0.078	10,822	1,299	0.072	10,100	1,060
3	30	0.2	0.064	12,264	1,490	0.052	10,822	1,168	0.048	10,100	955
3	30	0.5	0.064	12,264	1,655	0.052	10,822	1,299	0.048	10,100	1,060
3	30	0.2	0.064	12,264	1,490	0.052	10,822	1,168	0.048	10,100	955
3	30	0.5	0.064	12,264	1,655	0.052	10,822	1,299	0.048	10,100	1,060

This data recommendation applies to highly accurate and rigid machining conditions associated with HSC. It may serve as a general guidance only. The actual cutting parameters may very with each application. A proportional feed rate adjustment is necessary when the actual RPM is lower than the stated recommendation.

Tool Series 302 • Universal Application Carbide End Mills – Regular Length

Uncoated Tool # 2 Flutes	Uncoated Tool # 3 Flutes	Uncoated Tool # 4 Flutes	Size D1	Shank D2	O.A.L L1	L.O.C L2	Corner Radius	*Coating Choices
302-2010-01	302-3010-01	302-4010-01	1	4	50	4	0.1	-A
302-2010-02	302-3010-02	302-4010-02	1	4	50	4	0.2	-A
302-2020-02	302-3020-02	302-4020-02	2	4	50	5	0.2	-A
302-2020-05	302-3020-05	302-4020-05	2	4	50	5	0.5	-A
302-2030-02	302-3030-02	302-4030-02	3	6	50	8	0.2	-A
302-2030-05	302-3030-05	302-4030-05	3	6	50	8	0.5	-A
302-2040-02	302-3040-02	302-4040-02	4	6	50	11	0.2	-A
302-2040-05	302-3040-05	302-4040-05	4	6	50	11	0.5	-A
302-2040-10	302-3040-10	302-4040-10	4	6	50	11	1.0	-A
302-2050-02	302-3050-02	302-4050-02	5	6	50	16	0.2	-A
302-2050-05	302-3050-05	302-4050-05	5	6	50	16	0.5	-A
302-2050-10	302-3050-10	302-4050-10	5	6	50	16	1.0	-A
302-2060-02	302-3060-02	302-4060-02	6	6	50	16	0.2	-A
302-2060-05	302-3060-05	302-4060-05	6	6	50	16	0.5	-A
302-2060-10	302-3060-10	302-4060-10	6	6	50	16	1.0	-A
302-2080-02	302-3080-02	302-4080-02	8	8	63	22	0.2	-A
302-2080-05	302-3080-05	302-4080-05	8	8	63	22	0.5	-A
302-2080-10	302-3080-10	302-4080-10	8	8	63	22	1.0	-A
302-2100-02	302-3100-02	302-4100-02	10	10	75	25	0.2	-A
302-2100-05	302-3100-05	302-4100-05	10	10	75	25	0.5	-A
302-2100-10	302-3100-10	302-4100-10	10	10	75	25	1.0	-A
302-2120-02	302-3120-02	302-4120-02	12	12	75	30	0.2	-A
302-2120-05	302-3120-05	302-4120-05	12	12	75	30	0.5	-A
302-2120-10	302-3120-10	302-4120-10	12	12	75	30	1.0	-A

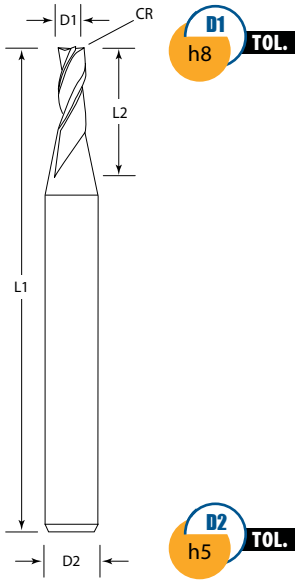

Shown uncoated (left) and coated (right) with AlTiN coating ("A"). Add letter "A" for AlTiN coating. Example: 302-2000-A.
For more coating information please refer to page 4.

Tool Series 352 • HPC Carbide End Mills – Hard Milling

4 FLUTES | ROUGHING | SEMI FINISHING | FINISHING | MILLING HARD MATERIAL | HPC HIGH PRECISION | RMS PREMIUM FINISH | PVD SPECIAL COATING | Z SPECIAL FLUTE

Uncoated Tool Number	Coated Tool Number	Size D1	Shank D2	O.A.L L1	L.O.C. L2	Corner Radius	Flutes Z
352-4010-01	352-4010-01-T	1	6	50	3	0.1	4
352-4010-02	352-4010-02-T	1	6	50	3	0.2	4
352-4015-01	352-4015-01-T	1.5	6	50	5	0.1	4
352-4015-02	352-4015-02-T	1.5	6	50	5	0.2	4
352-4015-05	352-4015-05-T	1.5	6	50	5	0.5	4
352-4020-01	352-4020-01-T	2	6	50	6	0.1	4
352-4020-02	352-4020-02-T	2	6	50	6	0.2	4
352-4020-05	352-4020-05-T	2	6	50	6	0.5	4
352-4030-02	352-4030-02-T	3	6	50	8	0.2	4
352-4030-05	352-4030-05-T	3	6	50	8	0.5	4
352-4040-02	352-4040-02-T	4	6	50	11	0.2	4
352-4040-05	352-4040-05-T	4	6	50	11	0.5	4
352-4040-10	352-4040-10-T	4	6	50	11	1.0	4
352-4050-02	352-4050-02-T	5	6	50	13	0.2	4
352-4050-05	352-4050-05-T	5	6	50	13	0.5	4
352-4050-10	352-4050-10-T	5	6	50	13	1.0	4
352-4060-03	352-4060-03-T	6	6	50	13	0.3	4
352-4060-05	352-4060-05-T	6	6	50	13	0.5	4
352-4060-10	352-4060-10-T	6	6	50	13	1.0	4
352-4080-03	352-4080-03-T	8	8	63	19	0.3	4
352-4080-05	352-4080-05-T	8	8	63	19	0.5	4
352-4080-10	352-4080-10-T	8	8	63	19	1.0	4
352-4080-20	352-4080-20-T	8	8	63	19	2.0	4
352-4100-05	352-4100-05-T	10	10	75	22	0.5	4
352-4100-10	352-4100-10-T	10	10	75	22	1.0	4
352-4100-20	352-4100-20-T	10	10	75	22	2.0	4
352-4120-05	352-4120-05-T	12	12	75	26	0.5	4
352-4120-10	352-4120-10-T	12	12	75	26	1.0	4
352-4120-20	352-4120-20-T	12	12	75	26	2.0	4
352-4140-05	352-4140-05-T	14	14	75	26	0.5	4
352-4140-10	352-4140-10-T	14	14	75	26	1.0	4
352-4140-20	352-4140-20-T	14	14	75	26	2.0	4
352-4160-05	352-4160-05-T	16	16	89	32	0.5	4
352-4160-10	352-4160-10-T	16	16	89	32	1.0	4
352-4160-20	352-4160-20-T	16	16	89	32	2.0	4
352-4200-05	352-4200-05-T	20	20	100	38	0.5	4
352-4200-10	352-4200-10-T	20	20	100	38	1.0	4
352-4200-20	352-4200-20-T	20	20	100	38	2.0	4

**Best Carbide recommends hard milling applications only in coated conditions.*

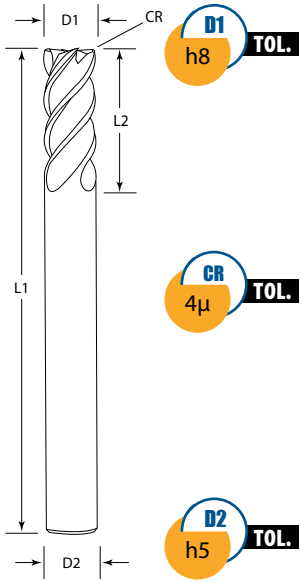

Special Tool Features and Advantages

- ★ **Radius Tolerance of ± 0.004 mm**
- ★ **Polished Rake Face**
- ★ **Superior Grinding Finish**

**Shown uncoated (left) and coated (right) with hard coating for hardened steels ≥ 50 HRC ("T"). For more coating information please refer to page 4.*

Tool Series 362 • HPC Carbide End Mills - Hard Milling

4 FLUTES | SEMI FINISHING | FINISHING | MILLING 60 HRC MATERIAL | HPC HIGH PRECISION | RMS PREMIUM FINISH | PVD SPECIAL COATING | Z SPECIAL FLUTE

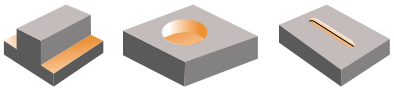

Uncoated Tool Number	Coated Tool Number	Size D1	Shank D2	O.A.L L1	L.O.C. L2	Corner Radius	Flutes Z
362-4040-02	**362-4040-02-T**	4	6	50	12	0.2	4
362-4060-05	**362-4060-05-T**	6	6	50	15	0.5	4
362-4080-05	**362-4080-05-T**	8	8	63	20	0.5	4
362-4100-10	**362-4100-10-T**	10	10	75	25	1.0	4
362-4120-10	**362-4120-10-T**	12	12	75	30	1.0	4

**Best Carbide recommends hard milling applications only in coated conditions.*

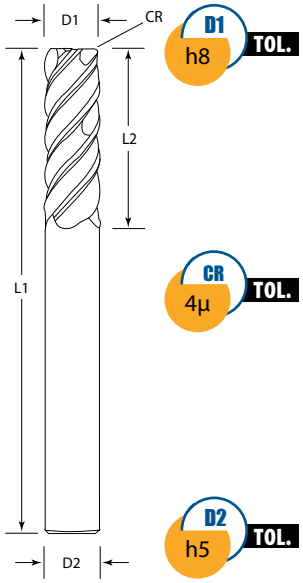

Technical Information

Material:	Cast Iron		Carbon Steel		Alloy Steel		Pre-Hardened Steel		Hardened Steel	
Hardness:	150-200 HB		180-220 Hb		200-250 HB		25-35 HRC		35-50 HRC	
Cutting Depth:	axial (1) ap: 1.5D1		axial (1) ap: 1.5D1		axial (1) ap: 1.5D1		axial (1) ap: 1.5D1		axial (1) ap: 1.5D1	
	radial (-) ae: 0.1D1		radial (-) ae: 0.1D1		radial (-) ae: 0.1D1		radial (-) ae: 0.1D1		radial (-) ae: 0.1D1	
Vc (m/min):	90-100		100-110		80-90		60-70		40-50	
Speed & Feed	n	Vf	n	Vf	n	Vf	n	Vf	n	Vf
	RPM	mm/min	RPM	mm/min	RPM	mm/min	RPM	mm/min	RPM	mm/min
Slide Milling (General Conditions / for HSC up +50% / Finishing Vf - 30% to -50%)										
D1:4	7,155	736	8,350	1,565	6,760	1,373	4,770	397	3,580	268
D1:6	4,770	848	5,565	1,983	4,505	1,608	3,180	397	2,385	295
D1:8	3,580	737	4,175	1,865	3,380	1,478	2,385	616	1,790	458
D1:10	2,865	721	3,340	1,400	2,705	1,406	1,910	603	1,430	451
D1:12	2,385	674	2,783	1,100	2,255	1,288	1,590	506	1,195	398
Slotting (General Conditions / for HSC up +50% / Finishing Vf - 30% to -50%)										
D1:4	3,580	268	7,555	661	6,360	477	4,375	317	2,785	197
D1:6	2,385	295	5,053	765	4,240	668	2,915	367	1,855	267
D1:8	1,790	458	3,775	692	3,180	625	2,185	371	1,390	267
D1:10	1,430	451	3,020	624	2,545	498	1,750	339	1,115	246
D1:12	1,195	398	609	609	2,120	477	1,460	325	930	232

This data recommendation may serve as a general guidance only. This actual cutting parameters may vary in each application. A proportional feed rate adjustment is necessary when the actual RPM is lower than the stated recommendation.

**Shown uncoated (left) and coated (right) with hard coating for hardened steels ≥ 50 HRC ("T"). For more coating information please refer to page 4.*

Tool Series 372 • HSC Super Accuracy Carbide End Mills for Aluminum - Regular Length

2 FLUTES | 3 FLUTES | SEMI FINISHING | FINISHING | MILLING SOFT MATERIAL | HSC HIGH SPEED | RMS PREMIUM FINISH | PVD SPECIAL COATING | Z SPECIAL FLUTE

Uncoated Tool Number	Coated Tool Number	Size D1	Shank D2	O.A.L L1	L.O.C. L2	Corner Radius	Flutes Z
372-2010-01	372-2010-01-L	1	4	50	3	0.1	2
372-2020-02	372-2020-02-L	2	4	50	6	0.2	2
372-2030-02	372-2030-02-L	3	6	50	10	0.2	2
372-2040-02	372-2040-02-L	4	6	50	15	0.2	2
372-2040-05	372-2040-05-L	4	6	50	15	0.5	2
372-2050-02	372-2050-02-L	5	6	50	20	0.2	2
372-2050-05	372-2050-05-L	5	6	50	20	0.5	2
372-3050-05	372-3050-05-L	5	6	50	20	0.5	3
372-2060-02	372-2060-02-L	6	6	50	20	0.2	2
372-2060-05	372-2060-05-L	6	6	50	20	0.5	2
372-2060-10	372-2060-10-L	6	6	50	20	1.0	2
372-3060-02	372-3060-02-L	6	6	50	20	0.2	3
372-3060-05	372-3060-05-L	6	6	50	20	0.5	3
372-3060-10	372-3060-10-L	6	6	50	20	1.0	3
372-2080-02	372-2080-02-L	8	8	63	25	0.2	2
372-2080-05	372-2080-05-L	8	8	63	25	0.5	2
372-2080-10	372-2080-10-L	8	8	63	25	1.0	2
372-2080-20	372-2080-20-L	8	8	63	25	2	2
372-3080-02	372-3080-02-L	8	8	63	25	0.2	3
372-3080-05	372-3080-05-L	8	8	63	25	0.5	3
372-3080-10	372-3080-10-L	8	8	63	25	1.0	3
372-3080-20	372-3080-20-L	8	8	63	25	2	3
372-2100-02	372-2100-02-L	10	10	75	25	0.2	2
372-2100-05	372-2100-05-L	10	10	75	25	0.5	2
372-2100-10	372-2100-10-L	10	10	75	25	1.0	2
372-2100-20	372-2100-20-L	10	10	75	25	2.0	2
372-3100-02	372-3100-02-L	10	10	75	25	0.2	3
372-3100-05	372-3100-05-L	10	10	75	25	0.5	3
372-3100-10	372-3100-10-L	10	10	75	25	1.0	3
372-3100-20	372-3100-20-L	10	10	75	25	2.0	3
372-2120-02	372-2120-02-L	12	12	75	30	0.2	2
372-2120-05	372-2120-05-L	12	12	75	30	0.5	2
372-2120-10	372-2120-10-L	12	12	75	30	1.0	2
372-2120-20	372-2120-20-L	12	12	75	30	2.0	2
372-3120-02	372-3120-02-L	12	12	75	30	0.2	3

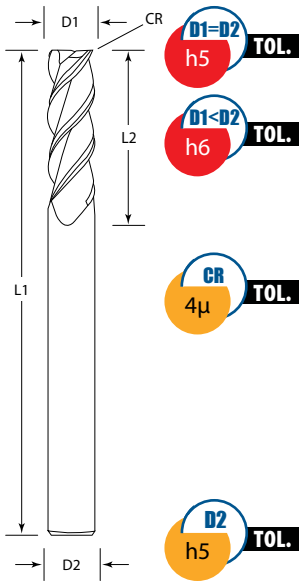

Special Tool Features and Advantages

- ★ Highest Tolerance Accuracy
- ★ Polished Rake Face
- ★ Superior Grinding Finish
- ★ Highest Grinding Accuracy

Cutting Diameter	h5	h6
1 mm – 3 mm	+ 0.000 -0.004 mm	+ 0.000 -0.006 mm
> 3 mm – 6 mm	+ 0.000 -0.005 mm	+ 0.000 -0.008 mm
> 6 mm – 10 mm	+ 0.000 -0.006 mm	+ 0.000 -0.009 mm
> 10 mm – 12 mm	+ 0.000 -0.008 mm	+ 0.000 -0.011 mm

Shown uncoated (left) and coated (right) with HP coating for aluminum and non-ferrous materials ("L"). For more coating information please refer to page 4.

Tool Series 372 • HSC Super Accuracy Carbide End Mills for Aluminum

2 FLUTES | 3 FLUTES | SEMI FINISHING | FINISHING | MILLING SOFT MATERIAL | HSC HIGH SPEED | RMS PREMIUM FINISH | PVD SPECIAL COATING | Z SPECIAL FLUTE

Uncoated Tool Number	Coated Tool Number	Size D1	Shank D2	O.A.L L1	L.O.C. L2	Corner Radius	Flutes Z
372-3120-05	372-3120-05-L	12	12	75	30	0.5	3
372-3120-10	372-3120-10-L	12	12	75	30	1.0	3
372-3120-20	372-3120-20-L	12	12	75	30	2.0	3
372-2140-02	372-2140-02-L	14	14	75	30	0.2	2
372-2140-05	372-2140-05-L	14	14	75	30	0.5	2
372-2140-10	372-2140-10-L	14	14	75	30	1.0	2
372-2140-20	372-2140-20-L	14	14	75	30	2.0	2
372-3140-02	372-3140-02-L	14	14	75	30	0.2	3
372-3140-05	372-3140-05-L	14	14	75	30	0.5	3
372-3140-10	372-3140-10-L	14	14	75	30	1.0	3
372-3140-20	372-3140-20-L	14	14	75	30	2.0	3
372-2160-02	372-2160-02-L	16	16	89	35	0.2	2
372-2160-05	372-2160-05-L	16	16	89	35	0.5	2
372-2160-10	372-2160-10-L	16	16	89	35	1.0	2
372-2160-20	372-2160-20-L	16	16	89	35	2.0	2
372-3160-02	372-3160-02-L	16	16	89	35	0.2	3
372-3160-05	372-3160-05-L	16	16	89	35	0.5	3
372-3160-10	372-3160-10-L	16	16	89	35	1.0	3
372-3160-20	372-3160-20-L	16	16	89	35	2.0	3
372-2180-02	372-2180-02-L	18	18	89	45	0.2	2
372-2180-05	372-2180-05-L	18	18	89	45	0.5	2
372-2180-10	372-2180-10-L	18	18	89	45	1.0	2
372-2180-20	372-2180-20-L	18	18	89	45	2.0	2
372-3180-02	372-3180-02-L	18	18	89	45	0.2	3
372-3180-05	372-3180-05-L	18	18	89	45	0.5	3
372-3180-10	372-3180-10-L	18	18	89	45	1.0	3
372-3180-20	372-3180-20-L	18	18	89	45	2.0	3
372-2200-02	372-2200-02-L	20	20	100	45	0.2	2
372-2200-05	372-2200-05-L	20	20	100	45	0.5	2
372-2200-10	372-2200-10-L	20	20	100	45	1.0	2
372-2200-20	372-2200-20-L	20	20	100	45	2.0	2
372-3200-02	372-3200-02-L	20	20	100	45	0.2	3
372-3200-05	372-3200-05-L	20	20	100	45	0.5	3
372-3200-10	372-3200-10-L	20	20	100	45	1.0	3
372-3200-20	372-3200-20-L	20	20	100	45	2.0	3

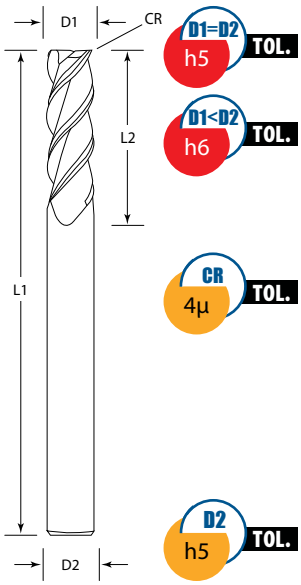

Special Tool Features and Advantages

- ★ Highest Tolerance Accuracy
- ★ Polished Rake Face
- ★ Superior Grinding Finish
- ★ Highest Grinding Accuracy

Cutting Diameter	h5	h6
12 mm – 14 mm	+ 0.000 -0.008 mm	+ 0.000 -0.011 mm
> 14 mm – 18 mm	+ 0.000 -0.008 mm	+ 0.000 -0.011 mm
> 18 mm – 20 mm	+ 0.000 -0.009 mm	+ 0.000 -0.013 mm

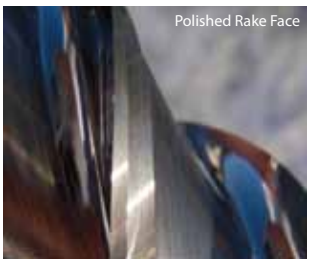

Shown uncoated (left) and coated (right) with HP coating for aluminum and non-ferrous materials ("L"). For more coating information please refer to page 4.

Tool Series 376 • HSC Super Accuracy Carbide End Mills for Aluminum - Long Length

2 FLUTES | 3 FLUTES | SEMI FINISHING | FINISHING | MILLING SOFT MATERIAL | HSC HIGH SPEED | RMS PREMIUM FINISH | PVD SPECIAL COATING | Z SPECIAL FLUTE

Uncoated Tool Number	Coated Tool Number	Size D1	Shank D2	O.A.L L1	L.O.C. L2	Corner Radius	Flutes Z
376-2030-02	376-2030-02-L	3	6	75	25	0.2	2
376-2040-02	376-2040-02-L	4	6	75	25	0.2	2
376-2040-05	376-2040-05-L	4	6	75	25	0.5	2
376-2050-02	376-2050-02-L	5	6	75	25	0.2	2
376-2050-05	376-2050-05-L	5	6	75	25	0.5	2
376-2060-02	376-2060-02-L	6	6	75	25	0.2	2
376-2060-05	376-2060-05-L	6	6	75	25	0.5	2
376-2060-10	376-2060-10-L	6	6	75	25	1.0	2
376-3060-02	376-3060-02-L	6	6	75	25	0.2	3
376-3060-05	376-3060-05-L	6	6	75	25	0.5	3
376-3060-10	376-3060-10-L	6	6	75	25	1.0	3
376-2080-02	376-2080-02-L	8	8	75	30	0.2	2
376-2080-05	376-2080-05-L	8	8	75	30	0.5	2
376-2080-10	376-2080-10-L	8	8	75	30	1.0	2
376-3080-02	376-3080-02-L	8	8	75	30	0.2	3
376-3080-05	376-3080-05-L	8	8	75	30	0.5	3
376-3080-10	376-3080-10-L	8	8	75	30	1.0	3
376-3100-02	376-3100-02-L	10	10	100	38	0.2	3
376-3100-05	376-3100-05-L	10	10	100	38	0.5	3
376-3100-10	376-3100-10-L	10	10	100	38	1.0	3
376-3100-20	376-3100-20-L	10	10	100	38	2.0	3
376-3120-02	376-3120-02-L	12	12	100	50	0.2	3
376-3120-05	376-3120-05-L	12	12	100	50	0.5	3
376-3120-10	376-3120-10-L	12	12	100	50	1.0	3
376-3120-20	376-3120-20-L	12	12	100	50	2.0	3
376-3160-02	376-3160-02-L	16	16	150	75	0.2	3
376-3160-05	376-3160-05-L	16	16	150	75	0.5	3
376-3160-10	376-3160-10-L	16	16	150	75	1.0	3
376-3160-20	376-3160-20-L	16	16	150	75	2.0	3
376-3200-02	376-3200-02-L	20	20	150	75	0.2	3
376-3200-05	376-3200-05-L	20	20	150	75	0.5	3
376-3200-10	376-3200-10-L	20	20	150	75	1.0	3
376-3200-20	376-3200-20-L	20	20	150	75	2.0	3

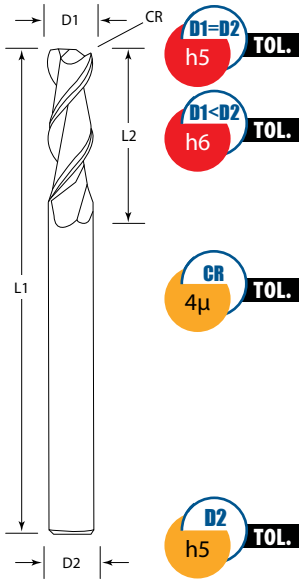

Special Tool Features and Advantages

- ★ Highest Tolerance Accuracy
- ★ Polished Rake Face
- ★ Superior Grinding Finish
- ★ Highest Grinding Accuracy

Cutting Diameter	h5	h6
3 mm	+ 0.000 -0.004 mm	+ 0.000 -0.006 mm
> 3 mm – 6 mm	+ 0.000 -0.005 mm	+ 0.000 -0.008 mm
> 6 mm – 10 mm	+ 0.000 -0.006 mm	+ 0.000 -0.009 mm
> 10 mm – 14 mm	+ 0.000 -0.008 mm	+ 0.000 -0.011 mm
> 14 mm – 18 mm	+ 0.000 -0.008 mm	+ 0.000 -0.011 mm
> 18 mm – 20 mm	+ 0.000 -0.009 mm	+ 0.000 -0.013 mm

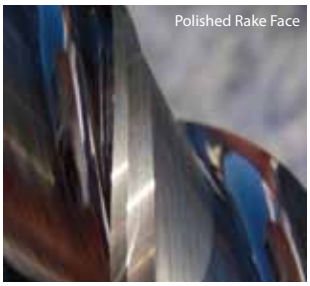

Shown uncoated (left) and coated (right) with HP coating for aluminum and non-ferrous materials ("L"). For more coating information please refer to page 4.

Tool Series 379 • HSC Super Accuracy Carbide End Mills for Aluminum - Extra Long Reach

3 FLUTES | SEMI FINISHING | FINISHING | MILLING SOFT MATERIAL | HSC HIGH SPEED | RMS PREMIUM FINISH | PVD SPECIAL COATING | Z SPECIAL FLUTE

Uncoated Tool Number	Coated Tool Number	Size D1	Shank D2	Neck D3	O.A.L L1	L.O.C. L2	Reach L3	Corner Radius	Flutes Z
379-3060-02	379-3060-02-L	6	6	5.6	75	6	30	0.2	3
379-3060-05	379-3060-05-L	6	6	5.6	75	6	30	0.5	3
379-3060-10	379-3060-10-L	6	6	5.6	75	6	30	1.0	3
379-3080-02	379-3080-02-L	8	8	7.6	75	8	45	0.2	3
379-3080-05	379-3080-05-L	8	8	7.6	75	8	45	0.5	3
379-3080-10	379-3080-10-L	8	8	7.6	75	8	45	1.0	3
379-3100-02	379-3100-02-L	10	10	9.6	100	10	50	0.2	3
379-3100-05	379-3100-05-L	10	10	9.6	100	10	50	0.5	3
379-3100-10	379-3100-10-L	10	10	9.6	100	10	50	1.0	3
379-3120-02	379-3120-02-L	12	12	11.6	100	12	55	0.2	3
379-3120-05	379-3120-05-L	12	12	11.6	100	12	55	0.5	3
379-3120-10	379-3120-10-L	12	12	11.6	100	12	55	1.0	3
379-3120-20	379-3120-20-L	12	12	11.6	100	12	55	2.0	3

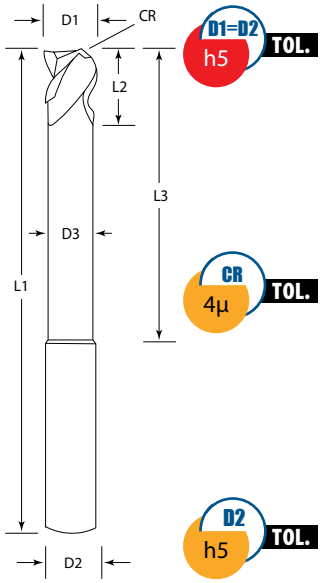

Special Tool Features and Advantages

- ★ Highest Tolerance Accuracy
- ★ Polished Rake Face
- ★ Superior Grinding Finish
- ★ Highest Grinding Accuracy

Cutting Diameter	h5
6 mm	+ 0.000 -0.005 mm
> 6 mm – 10 mm	+ 0.000 -0.006 mm
> 10 mm – 12 mm	+ 0.000 -0.008 mm

Shown uncoated (left) and coated (right) with HP coating for aluminum and non-ferrous materials ("L"). For more coating information please refer to page 4.

Tool Series 382 • HSC Super Accuracy Carbide End Mills for Aluminum – Long Reach

3 FLUTES | SEMI FINISHING | FINISHING | MILLING SOFT MATERIAL | HSC HIGH SPEED | RMS PREMIUM FINISH | PVD SPECIAL COATING | Z SPECIAL FLUTE

Uncoated Tool Number	Coated Tool Number	Size D1	Shank D2	Neck D3	O.A.L L1	L.O.C. L2	Reach L3	Corner Radius	Flutes Z
382-3060-02	382-3060-02-L	6	6	5.6	50	6	15	0.2	3
382-3060-05	382-3060-05-L	6	6	5.6	50	6	15	0.5	3
382-3060-10	382-3060-10-L	6	6	5.6	50	6	15	1.0	3
382-3080-02	382-3080-02-L	8	8	7.6	63	8	30	0.2	3
382-3080-05	382-3080-05-L	8	8	7.6	63	8	30	0.5	3
382-3080-10	382-3080-10-L	8	8	7.6	63	8	30	1.0	3
382-3100-02	382-3100-02-L	10	10	9.6	75	10	35	0.2	3
382-3100-05	382-3100-05-L	10	10	9.6	75	10	35	0.5	3
382-3100-10	382-3100-10-L	10	10	9.6	75	10	35	1.0	3
382-3120-02	382-3120-02-L	12	12	11.6	75	12	40	0.2	3
382-3120-05	382-3120-05-L	12	12	11.6	75	12	40	0.5	3
382-3120-10	382-3120-10-L	12	12	11.6	75	12	40	1.0	3

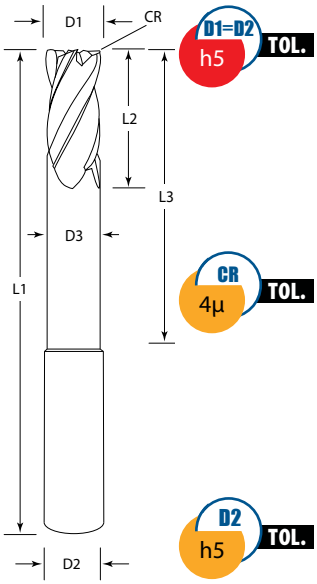

Special Tool Features and Advantages

- ★ Highest Tolerance Accuracy
- ★ Polished Rake Face
- ★ Superior Grinding Finish
- ★ Highest Grinding Accuracy

Cutting Diameter	h5
6 mm	+ 0.000 -0.005 mm
> 6 mm – 10 mm	+ 0.000 -0.006 mm
> 10 mm – 12 mm	+ 0.000 -0.008 mm

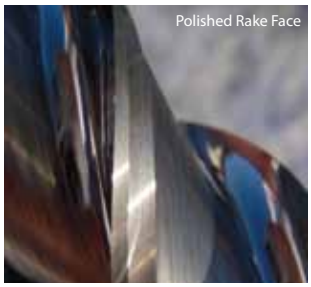

CR Corner Radius

Shown uncoated (left) and coated (right) with HP coating for aluminum and non-ferrous materials ("L"). For more coating information please refer to page 4.

Technical Support for HSC Soft Material Milling

Parameter		Best Carbide	
Tool Number		376-3160-05	
Tool Diameter			mm
Tool Holder		Shrink Fit	
No. of Flutes		3	
Cutting Speed	Vc	500	m/mm
Revolution	n	10,000	U-Din
Feed/Minute	Vf	2500	mm/min
Axial	ap	30	mm
Radial	æ	2.0 - 4.0	mm (%)
Job Length		630 min	m

Best Carbide end mill showed no wear after 630 minutes. No other end mill generated a better work pieces surface finish.

Parameter		Best Carbide	Leading Brand	
Tool Number		372--3080-05		
Tool Diameter		8	8	mm
Tool Holder		Hyper 12M-165	Hyper 12M-165	
Cutting Speed	Vc	414	311	m/min
Revolution	n	16,500	16,500	U/min
Feed/Minute	Vf	5000	3500	mm/min
Feed/Tooth	fz	0.1	0.08	mm/z
Axial	ap	0.5	0.5	mm
Radial	ae	100%	100%	mm (%)
Total Cutt. Depth		20	20	mm
Coolant		Coolant Oil	Coolant Oil	
Work Piece Qty.		1	1	Pieces
Tool Life in Min.	T	no wear	no wear	min
Spindle Load		36%	55%	%

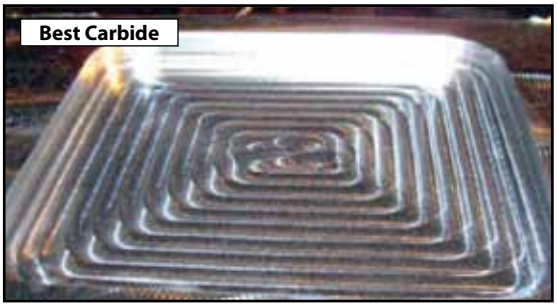

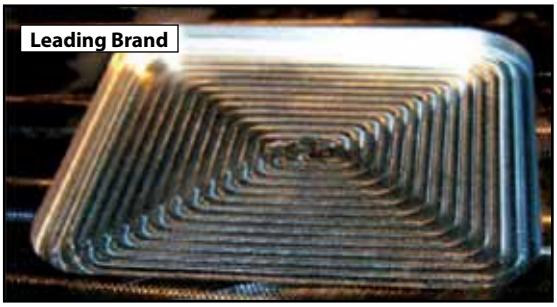

Best Carbide end mill performed without any vibration - almost silent run - and accomplished in this roughing cut an optimal surface finish on the work piece with significantly less spindle load.

Parameter		Best Carbide	Leading Brand	
Tool Number		372-3160-02		
Tool Diameter		16	16	mm
Tool Holder		Collect Chuck	Collect Chuck	
No. of Flutes		3	3	
Cutting Speed	Vc	790	790	m/min
Revolution	n	14,000	14,000	U/min
Feed/Minute	Vf	2000	2000	mm/min
Feed/Tooth	fz	0.07	0.07	mm/z
Axial	ap	20	20	mm
Radial	ae	0.1	0.1	mm (5)
Spindle		1%	20%	%

In contrast to the leading brand end mill, the Best Carbide end mill accomplished an outstanding surface finish with minimal spindle load.

Tool Series 392 • HPC Finishing Carbide End Mills for Steel and High Temp. Alloys

Uncoated Tool # 5 Flutes	Size D1	Shank D2	O.A.L L1	L.O.C L2	Corner Radius	*Coating Choices
392-5030-02	3	6	50	10	0.2	-R / -A
392-5040-02	4	6	50	15	0.2	-R / -A
392-5040-05	4	6	50	15	0.5	-R / -A
392-5050-02	5	6	50	20	0.2	-R / -A
392-5050-05	5	6	50	20	0.5	-R / -A
392-5060-02	6	6	50	20	0.2	-R / -A
392-5060-05	6	6	50	20	0.5	-R / -A
392-5080-03	8	8	63	25	0.3	-R / -A
392-5080-05	8	8	63	25	0.5	-R / -A
392-5080-10	8	8	63	25	1.0	-R / -A
392-5100-05	10	10	75	25	0.5	-R / -A
392-5100-10	10	10	75	25	1.0	-R / -A
392-5100-20	10	10	75	25	2.0	-R / -A
392-5120-05	12	12	75	30	0.5	-R / -A
392-5120-10	12	12	75	30	1.0	-R / -A
392-5120-20	12	12	75	30	2.0	-R / -A
392-5140-05	14	14	75	30	0.5	-R / -A
392-5140-10	14	14	75	30	1.0	-R / -A
392-5140-20	14	14	75	30	2.0	-R / -A
392-5160-05	16	16	100	35	0.5	-R / -A
392-5160-10	16	16	100	35	1.0	-R / -A
392-5160-20	16	16	100	35	2.0	-R / -A
392-5180-05	18	18	100	45	0.5	-R / -A
392-5180-10	18	18	100	45	1.0	-R / -A
392-5180-20	18	18	100	45	2.0	-R / -A
392-5200-05	20	20	100	45	0.5	-R / -A
392-5200-10	20	20	100	45	1.0	-R / -A
392-5200-20	20	20	100	45	2.0	-R / -A

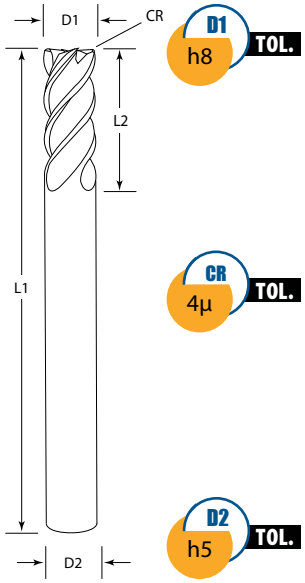

Special Tool Features and Advantages

★ **Excellent Work Piece Finishes**

★ **Multiple Coating Options**

- **"A"** AlTiN coating.
- **"R"** Nano composite.

Shown uncoated (left) and coated (right) with AlTiN coating ("A"). Add letter "A" for AlTiN coating or letter "R" for nano composite coating. Example: 392-5000-A. For more coating information please refer to page 4.

Tool Series 402 • HFC Carbide End Mills – Variable Helix / Offset

Uncoated Tool Number	Size D1	Shank D2	O.A.L L1	L.O.C. L2	Corner Radius	Flutes Z	*Coating Choices
402-4030-02	3	6	50	8	0.2	4	-R / -A
402-4040-02	4	6	50	11	0.2	4	-R / -A
402-4040-05	4	6	50	11	0.5	4	-R / -A
402-4050-02	5	6	50	13	0.2	4	-R / -A
402-4050-05	5	6	50	13	0.5	4	-R / -A
402-4060-02	6	6	50	13	0.2	4	-R / -A
402-4060-05	6	6	50	13	0.5	4	-R / -A
402-4080-02	8	8	63	19	0.2	4	-R / -A
402-4080-05	8	8	63	19	0.5	4	-R / -A
402-4100-02	10	10	75	22	0.2	4	-R / -A
402-4100-05	10	10	75	22	0.5	4	-R / -A
402-4100-10	10	10	75	22	1.0	4	-R / -A
402-4120-02	12	12	75	26	0.2	4	-R / -A
402-4120-05	12	12	75	26	0.5	4	-R / -A
402-4120-10	12	12	75	26	1.0	4	-R / -A
402-4140-02	14	14	75	26	0.2	4	-R / -A
402-4140-05	14	14	75	26	0.5	4	-R / -A
402-4140-10	14	14	75	26	1.0	4	-R / -A
402-4160-02	16	16	89	32	0.2	4	-R / -A
402-4160-05	16	16	89	32	0.5	4	-R / -A
402-4160-10	16	16	89	32	1.0	4	-R / -A
402-4200-02	20	20	100	38	0.2	4	-R / -A
402-4200-05	20	20	100	38	0.5	4	-R / -A
402-4200-10	20	20	100	38	1.0	4	-R / -A

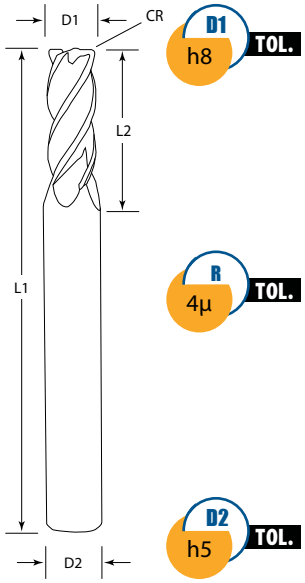

Special Tool Features and Advantages

- ★ **Reduced Harmonics and Vibrations**
- ★ **Unique Flute Form**
- ★ **Polished Land Width**
- ★ **Multiple Coating Options**
  - **"A"** AlTiN coating.
  - **"R"** Nano composite.

**Shown uncoated (left) and coated (right) with AlTiN coating ("A"). Add letter "A" for AlTiN coating or letter "R" for nano composite coating. Example: 402-4000-A. For more coating information please refer to page 4.*

Tool Series 409 • HFC Carbide End Mills - Variable Helix / Offset - Long Length / Reach

Uncoated Tool # 4 Flutes	Size D1	Shank D2	Neck D3	O.A.L L1	L.O.C. L2	Reach L3	Corner Radius	Flutes Z	*Coating Choices
409-4040-02	4	4	3.8	100	10.0	50	0.2	4	-R / -A
409-4050-02	5	6	5.6	100	13.0	50	0.2	4	-R / -A
409-4050-05	5	6	5.6	100	13.0	50	0.5	4	-R / -A
409-4060-02	6	6	5.6	100	13.0	50	0.2	4	-R / -A
409-4060-05	6	6	5.6	100	13.0	50	0.5	4	-R / -A
409-4080-02	8	8	7.6	100	19.0	50	0.2	4	-R / -A
409-4080-05	8	8	7.6	100	19.0	50	0.5	4	-R / -A
409-4100-02	10	10	9.6	125	22.0	65	0.2	4	-R / -A
409-4100-05	10	10	9.6	125	22.0	65	0.5	4	-R / -A
409-4100-10	10	10	9.6	125	22.0	65	1.0	4	-R / -A
409-4120-02	12	12	11.6	150	26.0	75	0.2	4	-R / -A
409-4120-05	12	12	11.6	150	26.0	75	0.5	4	-R / -A
409-4120-10	12	12	11.6	150	26.0	75	1.0	4	-R / -A
409-4160-02	16	16	15.6	150	32.0	75	0.2	4	-R / -A
409-4160-05	16	16	15.6	150	32.0	75	0.5	4	-R / -A
409-4160-10	16	16	15.6	150	32.0	75	1.0	4	-R / -A
409-4200-02	20	20	19.6	150	40.0	100	0.2	4	-R / -A
409-4200-05	20	20	19.6	150	40.0	100	0.5	4	-R / -A
409-4200-10	20	20	19.6	150	40.0	100	1.0	4	-R / -A

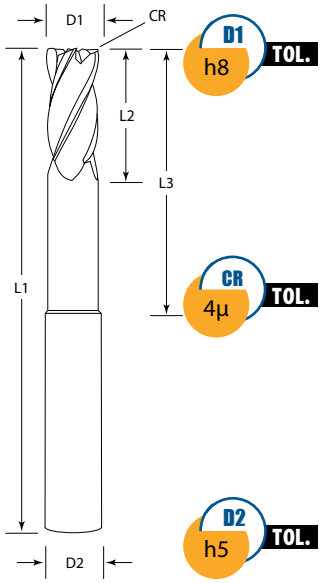

Special Tool Features and Advantages

- ★ **Reduced Harmonics and Vibrations**
- ★ **Unique Flute Form**
- ★ **Polished Land Width**
- ★ **Multiple Coating Options**
  - **"A"** AlTiN coating.
  - **"R"** Nano composite.

Shown uncoated (left) and coated (right) with AlTiN coating ("A"). Add letter "A" for AlTiN coating or letter "R" for nano composite coating. Example: 409-4000-A. For more coating information please refer to page 4.

Tool Series 412 • HFC Carbide End Mills for Stainless Steel – Variable Helix / Offset

Uncoated Tool Number	Coated Tool Number	Size D1	Shank D2	O.A.L L1	L.O.C. L2	Corner Radius	Flutes Z	*Coating Choices
412-4030-02	412-4030-02-D	3	6	50	8	0.2	4	-D / -A
412-4040-02	412-4040-02-D	4	6	50	11	0.2	4	-D / -A
412-4040-05	412-4040-05-D	4	6	50	11	0.5	4	-D / -A
412-4050-02	412-4050-02-D	5	6	50	13	0.2	4	-D / -A
412-4050-05	412-4050-05-D	5	6	50	13	0.5	4	-D / -A
412-4060-02	412-4060-02-D	6	6	50	13	0.2	4	-D / -A
412-4060-05	412-4060-05-D	6	6	50	13	0.5	4	-D / -A
412-4080-02	412-4080-02-D	8	8	63	19	0.2	4	-D / -A
412-4080-05	412-4080-05-D	8	8	63	19	0.5	4	-D / -A
412-4100-02	412-4100-02-D	10	10	75	22	0.2	4	-D / -A
412-4100-05	412-4100-05-D	10	10	75	22	0.5	4	-D / -A
412-4100-10	412-4100-10-D	10	10	75	22	1.0	4	-D / -A
412-4120-02	412-4120-02-D	12	12	75	26	0.2	4	-D / -A
412-4120-05	412-4120-05-D	12	12	75	26	0.5	4	-D / -A
412-4120-10	412-4120-10-D	12	12	75	26	1.0	4	-D / -A
412-4140-02	412-4140-02-D	14	14	75	26	0.2	4	-D / -A
412-4140-05	412-4140-05-D	14	14	75	26	0.5	4	-D / -A
412-4140-10	412-4140-10-D	14	14	75	26	1.0	4	-D / -A
412-4160-02	412-4160-02-D	16	16	89	32	0.2	4	-D / -A
412-4160-05	412-4160-05-D	16	16	89	32	0.5	4	-D / -A
412-4160-10	412-4160-10-D	16	16	89	32	1.0	4	-D / -A
412-4200-02	412-4200-02-D	20	20	100	38	0.2	4	-D / -A
412-4200-05	412-4200-05-D	20	20	100	38	0.5	4	-D / -A
412-4200-10	412-4200-10-D	20	20	100	38	1.0	4	-D / -A

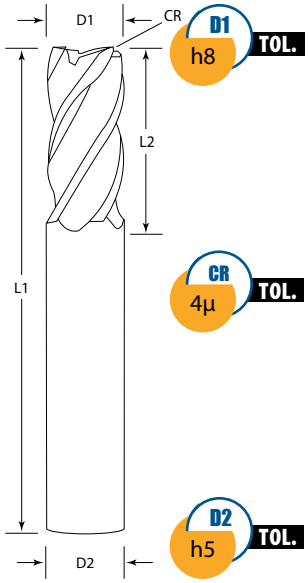

Special Tool Features and Advantages

- ★ **Reduced Harmonics and Vibrations**
- ★ **Unique Flute Form**
- ★ **Polished Land Width**
- ★ **Multiple Coating Options**
  - **"A"** AlTiN coating.
  - **"D"** HP coating recommended for stainless steels, titanium and high temperature alloys.

**Shown uncoated (left) and coated (right) with HP coating for stainless steels, titanium and hihg temperature alloys ("D"). Add letter "A" for AlTiN coating, or letter "D" for HP coating for stainless steels, titanium and high temperature alloys. Example: 412-4000-A. For more coating information please refer to page 4.*

Ball Nose • Universal & High Performance Carbide End Mills

BN ball nose

Best Carbide manufactures a complete line of ball nose universal and high performance end mills. The size range starts with the smallest cutting diameter of 0.1 mm and ends at a cutting diameter of 25 mm. Small size increments, various lengths of cut choices as well as a full range different overall length options ensure that you will easily and the right end mill for your application. The comprehensive product line consists of a complete line of miniature (micro), universal application and high performance end mills, providing you with the best choice for a broad machining range and / or to achieve the highest productivity rates in a specific milling application. All high performance ball nose end mills feature a very accurate radius form with a close radius tolerance of +/- 4 µm.

Our end mills feature the following performance factors:

- **Optimized Carbide Grades**
  (fine, submicron, ultra fine & nano grades)
- **Highly Innovative Tool Geometries**
  (optimized rake, clearance and helix angles, variable helix and variable flute offsets)
- **Superior Grinding Finish and Dimensional Accuracy**
  (excellent shank and flute concentricity, smooth cutting edge quality, precise and consistent tool geometries)
- **Advanced Tool Coating Technologies**
  (full range of standard & specialized coatings)
- **Near Perfect Ball Shape**
  (radius tolerance of + / - 4 µm for high performance end mills)

Tool Series 303 • Universal Application Carbide End Mills – Regular Length

Uncoated Tool # 2 Flutes	Uncoated Tool # 3 Flutes	Uncoated Tool # 4 Flutes	Size D1	Shank D2	O.A.l L1	L.O.C. L2	Radius R	*Coating Choices
303-2010	303-3010	303-4010	1.0	3	38	4	0.5	-A
303-2015	303-3015	303-4015	1.5	3	38	4.5	0.75	-A
303-2020	303-3020	303-4020	2.0	3	38	6.3	1	-A
303-2025	303-3025	303-4025	2.5	3	38	9.5	1.25	-A
303-2030	303-3030	303-4030	3.0	3	38	12	1.50	-A
303-2035	303-3035	303-4035	3.5	4	50	12	1.75	-A
303-2040	303-3040	303-4040	4.0	4	50	14	2	-A
303-2045	303-3045	303-4045	4.5	6	50	16	2.25	-A
303-2050	303-3050	303-4050	5.0	6	50	16	2.5	-A
303-2060	303-3060	303-4060	6.0	6	50	19	3	-A
303-2070	303-3070	303-4070	7.0	8	63	19	3.50	-A
303-2080	303-3080	303-4080	8.0	8	63	20	4	-A
303-2090	303-3090	303-4090	9.0	10	75	22	4.5	-A
303-2100	303-3100	303-4100	10.0	10	75	22	5	-A
303-2110	303-3110	303-4110	11.0	12	75	25	5.5	-A
303-2120	303-3120	303-4120	12.0	12	75	25	6	-A
303-2130	303-3130	303-4130	13.0	13	89	26	6.5	-A
303-2140	303-3140	303-4140	14.0	14	89	32	7	-A
303-2150	303-3150	303-4150	15.0	16	89	32	7.5	-A
303-2160	303-3160	303-4160	16.0	16	89	32	8	-A
303-2180	303-3180	303-4180	18.0	18	100	38	9	-A
303-2190	303-3190	303-4190	19.0	19	100	38	9.5	-A
303-2200	303-3200	303-4200	20.0	20	100	38	10	-A
303-2250	303-3250	303-4250	25.0	25	100	38	12.5	-A

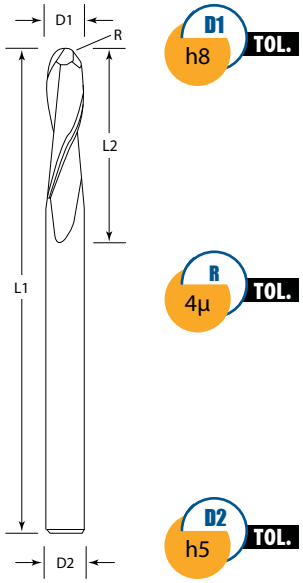

Shown uncoated (left) and coated (right) with AlTiN coating ("A"), Add letter "A" for AlTiN coating. Example: 303-2000-A.
For more coating information please refer to page 4.

Tool Series 307 • Universal Application Carbide End Mills – Stub Length

2 FLUTES | 4 FLUTES | ROUGHING | SEMI FINISHING | FINISHING | MILLING MEDIUM MATERIAL

Uncoated Tool # 2 Flutes	Uncoated Tool # 4 Flutes	Size D1	Shank D2	O.A.L L1	L.O.C L2	Radius R	*Coating Choices
307-2010	307-4010	1	3	38	2	0.5	-A
307-2015	307-4015	1.5	3	38	3	0.75	-A
307-2020	307-4020	2	3	38	4	1	-A
307-2025	307-4025	2.5	3	38	5	1.25	-A
307-2030	307-4030	3	3	38	6	1.5	-A
307-2040	307-4040	4	4	50	8	2	-A
307-2050	307-4050	5	5	50	10	2.5	-A
307-2060	307-4060	6	6	50	12	3	-A
307-2070	307-4070	7	8	50	12	3.5	-A
307-2080	307-4080	8	8	50	12	41	-A
307-2090	307-4090	9	9	50	14	4.5	-A
307-2100	307-4100	10	10	50	16	5	-A
307-2110	307-4110	11	12	63	19	5.5	-A
307-2120	307-4120	12	12	63	19	6	-A

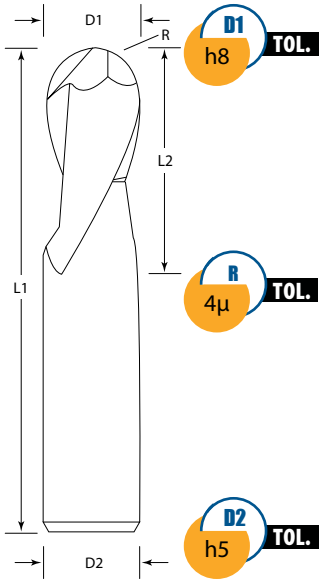

Shown uncoated (left) and coated (right) with AlTiN coating ("A"), Add letter "A" for AlTiN coating. Example: 307-2000-A.
For more coating information please refer to page 4.

Tool Series 317 • Universal Application Carbide End Mills – Extra Long Length

2 FLUTES | 4 FLUTES | SEMI FINISHING | FINISHING | MILLING SOFT MATERIAL | MILLING MEDIUM MATERIAL

Uncoated Tool # 2 Flutes	Uncoated Tool # 4 Flutes	Size D1	Shank D2	O.A.L L1	L.O.C L2	Radius R	*Coating Choices
317-2030	317-4030	3	3	75	25	1.5	-A
317-2040	317-4040	4	4	75	25	2	-A
317-2050	317-4050	5	6	75	25	2.5	-A
317-2060	317-4060	6	6	75	25	3	-A
317-2080	317-4080	8	8	75	25	4	-A
317-2100	317-4100	10	10	100	50	5	-A
317-2120-50	317-4120-50	12	12	100	50	6	-A
317-2120-75	317-4120-75	12	12	150	75	6	-A
317-2140	317-4140	14	14	150	75	7	-A
317-2160	317-4160	16	16	150	75	8	-A
317-2180	317-4180	18	18	150	75	9	-A
317-2200	317-4200	20	20	150	75	10	-A
317-2250	317-4250	25	25	150	75	12.5	-A

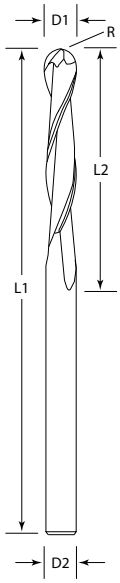

D1 h8 TOL.

R 4µ TOL.

D2 h5 TOL.

Shown uncoated (left) and coated (right) with AlTiN coating ("A"), Add letter "A" for AlTiN coating. Example: 317-2000-A.
For more coating information please refer to page 4.

Tool Series 327 • Miniature Carbide End Mills – 4mm Shank

2 FLUTES | 4 FLUTES | SEMI FINISHING | FINISHING | MILLING SOFT MATERIAL | MILLING MEDIUM MATERIAL

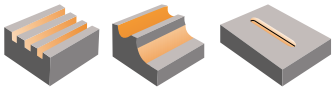

Uncoated Tool Number	Coated Tool Number	Size D1	Shank D2	O.A.L L1	L.O.C. L2	Radius R	Flutes Z
327-2005	327-2005-A	0.5	4	50	1.5	0.25	2
327-2006	327-2006-A	0.6	4	50	1.8	0.3	2
327-2007	327-2007-A	0.7	4	50	2.1	0.35	2
327-2008	327-2008-A	0.8	4	50	2.4	0.4	2
327-2009	327-2009-A	0.9	4	50	2.7	0.45	2
327-2010	327-2010-A	1	4	50	3.0	0.5	2
327-4010	327-4010-A	1	4	50	3.0	0.5	4
327-2011	327-2011-A	1.1	4	50	3.3	0.55	2
327-4011	327-4011-A	1.1	4	50	3.3	0.55	4
327-2012	327-2012-A	1.2	4	50	3.8	0.6	2
327-4012	327-4012-A	1.2	4	50	3.8	0.6	4
327-2013	327-2013-A	1.3	4	50	3.9	0.65	2
327-4013	327-4013-A	1.3	4	50	3.9	0.65	4
327-2014	327-2014-A	1.4	4	50	4.2	0.7	2
327-4014	327-4014-A	1.4	4	50	4.2	0.7	4
327-2015	327-2015-A	1.5	4	50	4.2	0.75	2
327-4015	327-4015-A	1.5	4	50	4.2	0.75	4
327-2016	327-2016-A	1.6	4	50	4.8	0.8	2
327-4016	327-4016-A	1.6	4	50	4.8	0.8	4
327-2018	327-2018-A	1.8	4	50	5.3	0.9	2
327-4018	327-4018-A	1.8	4	50	5.3	0.9	4
327-2020	327-2020-A	2	4	50	6.0	1	2
327-4020	327-4020-A	2	4	50	6.0	1	4
327-2025	327-2025-A	2.5	4	50	8.0	1.25	2
327-4025	327-4025-A	2.5	4	50	8.0	1.25	4

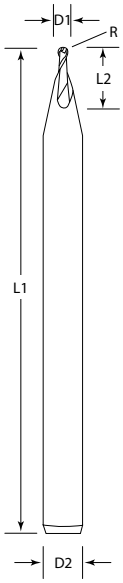

D1 h8 TOL.

R 4µ TOL.

D2 h5 TOL.

Shown uncoated (left) and coated (right) with AlTiN coating ("A"), Add letter "A" for AlTiN coating. Example: 327-2000-A.
For more coating information please refer to page 4.

Tool Series 333 • Miniature Carbide End Mills – 3mm Shank

2 FLUTES | 4 FLUTES | SEMI FINISHING | FINISHING | MILLING SOFT MATERIAL | MILLING MEDIUM MATERIAL

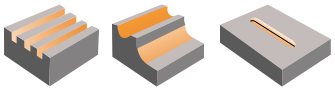

Uncoated Tool Number	Coated Tool Number	Size D1	Shank D2	O.A.L L1	L.O.C. L2	Radius R	Flutes Z
333-2003	333-2003-A	0.3	3	38	0.5	0.15	2
333-2004	333-2004-A	0.4	3	38	0.6	0.2	2
333-2005	333-2005-A	0.5	3	38	0.8	0.25	2
333-2006	333-2006-A	0.6	3	38	0.9	0.3	2
333-2007	333-2007-A	0.7	3	38	1.1	0.35	2
333-2008	333-2008-A	0.8	3	38	1.2	0.4	2
333-2009	333-2009-A	0.9	3	38	1.4	0.45	2
333-2010	333-2010-A	1	3	38	1.5	0.5	2
333-4010	333-4010-A	1	3	38	1.5	0.5	4
333-2011	333-2011-A	1.1	3	38	1.7	0.55	2
333-4011	333-4011-A	1.1	3	38	1.7	0.55	4
333-2012	333-2012-A	1.2	3	38	1.8	0.6	2
333-4012	333-4012-A	1.2	3	38	1.8	0.6	4
333-2013	333-2013-A	1.3	3	38	2.0	0.65	2
333-4013	333-4013-A	1.3	3	38	2.0	0.65	4
333-2014	333-2014-A	1.4	3	38	2.1	0.7	2
333-4014	333-4014-A	1.4	3	38	2.1	0.7	4
333-2015	333-2015-A	1.5	3	38	2.3	0.75	2
333-4015	333-4015-A	1.5	3	38	2.3	0.75	4
333-2016	333-2016-A	1.6	3	38	2.4	0.8	2
333-4016	333-4016-A	1.6	3	38	2.4	0.8	4
333-2017	333-2017-A	1.7	3	38	2.5	0.85	2
333-4017	333-4017-A	1.7	3	38	2.5	0.85	4
333-2018	333-2018-A	1.8	3	38	2.7	0.9	2
333-4018	333-4018-A	1.8	3	38	2.7	0.9	4
333-2019	333-2019-A	1.9	3	38	2.8	0.95	2
333-4019	333-4019-A	1.9	3	38	2.8	0.95	4
333-2020	333-2020-A	2	3	38	3.0	1	2
333-4020	333-4020-A	2	3	38	3.0	1	4
333-2025	333-2025-A	2.5	3	38	3.8	1.25	2
333-4025	333-4025-A	2.5	3	38	3.8	1.25	4

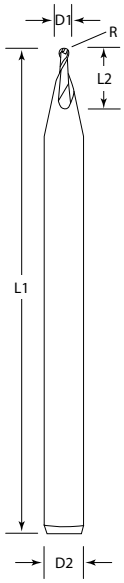

D1 h8 TOL.

R 4µ TOL.

D2 h5 TOL.

Shown uncoated (left) and coated (right) with AlTiN coating ("A"), Add letter "A" for AlTiN coating. Example: 333-2000-A.
For more coating information please refer to page 4.

Tool Series 340 • HSC Miniature Carbide End Mills for Aluminum – Long Reach

2 FLUTES | SEMI FINISHING | FINISHING | RIB MINATURE | MILLING SOFT MATERIAL | HSC HIGH SPEED

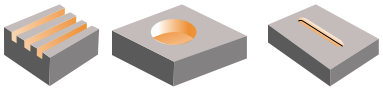

Uncoated Tool Number	Coated Tool Number	Size D1	Shank D2	Neck D3	O.A.L L1	L.O.C. L2	Reach L3	Radius R	Flutes Z
340-2002-0.5	340-2002-0.5-L	0.2	4	0.17	45	0.15	0.5	0.1	2
340-2002-1	340-2002-1-L	0.2	4	0.17	45	0.15	1.0	0.1	2
340-2002-1.5	340-2002-1.5-L	0.2	4	0.17	45	0.15	1.5	0.1	2
340-2002-2	340-2002-2-L	0.2	4	0.17	45	0.15	2.0	0.1	2
340-2003-1	340-2003-1-L	0.3	4	0.27	45	0.24	1.0	0.15	2
340-2003-1.5	340-2003-1.5-L	0.3	4	0.27	45	0.24	1.5	0.15	2
340-2003-2	340-2003-2-L	0.3	4	0.27	45	0.24	2.0	0.15	2
340-2003-2.5	340-2003-2.5-L	0.3	4	0.27	45	0.24	2.5	0.15	2
340-2003-3	340-2003-3-L	0.3	4	0.27	45	0.24	3.0	0.15	2
340-2003-6	340-2003-6-L	0.3	4	0.27	45	0.24	6.0	0.15	2
340-2004-1	340-2004-1-L	0.4	4	0.37	45	0.30	1.0	0.2	2
340-2004-2	340-2004-2-L	0.4	4	0.37	45	0.30	2.0	0.2	2
340-2004-3	340-2004-3-L	0.4	4	0.37	45	0.30	3.0	0.2	2
340-2004-4	340-2004-4-L	0.4	4	0.37	45	0.30	4.0	0.2	2
340-2004-6	340-2004-6-L	0.4	4	0.37	45	0.30	6.0	0.2	2
340-2004-8	340-2004-8-L	0.4	4	0.37	45	0.30	8.0	0.2	2
340-2005-1	340-2005-1-L	0.5	4	0.47	45	0.35	1.0	0.25	2
340-2005-2	340-2005-2-L	0.5	4	0.47	45	0.35	2.0	0.25	2
340-2005-3	340-2005-3-L	0.5	4	0.47	45	0.35	3.0	0.25	2
340-2005-4	340-2005-4-L	0.5	4	0.47	45	0.35	4.0	0.25	2
340-2005-5	340-2005-5-L	0.5	4	0.47	45	0.35	5.0	0.25	2
340-2005-6	340-2005-6-L	0.5	4	0.47	45	0.35	6.0	0.25	2
340-2005-8	340-2005-8-L	0.5	4	0.47	45	0.35	8.0	0.25	2
340-2005-10	340-2005-10-L	0.5	4	0.47	45	0.35	10.0	0.25	2
340-2006-2	340-2006-2-L	0.6	4	0.57	45	0.40	2.0	0.3	2
340-2006-4	340-2006-4-L	0.6	4	0.57	45	0.40	4.0	0.3	2
340-2006-6	340-2006-6-L	0.6	4	0.57	45	0.40	6.0	0.3	2
340-2006-8	340-2006-8-L	0.6	4	0.57	45	0.40	8.0	0.3	2
340-2006-10	340-2006-10-L	0.6	4	0.57	45	0.40	10.0	0.3	2
340-2006-12	340-2006-12-L	0.6	4	0.57	53	0.40	12.0	0.3	2
340-2008-2	340-2008-2-L	0.8	4	0.77	45	0.50	2.0	0.4	2
340-2008-4	340-2008-4-L	0.8	4	0.77	45	0.50	4.0	0.4	2
340-2008-6	340-2008-6-L	0.8	4	0.77	45	0.50	6.0	0.4	2
340-2008-8	340-2008-8-L	0.8	4	0.77	45	0.50	8.0	0.4	2
340-2008-10	340-2008-10-L	0.8	4	0.77	45	0.50	10.0	0.4	2
340-2008-12	340-2008-12-L	0.8	4	0.77	53	0.50	12.0	0.4	2
340-2008-16	340-2008-16-L	0.8	4	0.77	53	0.50	16.0	0.4	2
340-2010-2	340-2010-2-L	1	4	0.96	45	0.80	2.0	0.5	2
340-2010-3	340-2010-3-L	1	4	0.96	45	0.80	3.0	0.5	2
340-2010-4	340-2010-4-L	1	4	0.96	45	0.80	4.0	0.5	2

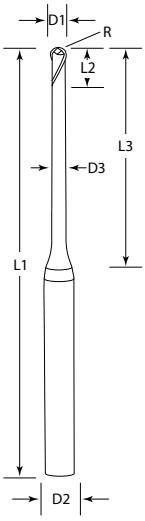

D1 h8 TOL.

R 4µ TOL.

D2 h5 TOL.

Special Tool Features and Advantages

- ★ Highest Tolerance Accuracy
- ★ Special Neck Form for Greater Reach
- ★ Superior Grinding Finish
- ★ Highest Grinding Accuracy

**Shown uncoated (left) and coated (right) with HP coating for aluminum and non-ferrous materials ("L"). For more coating information please refer to page 4.*

Tool Series 340 • HSC Miniature Carbide End Mills for Aluminum – Long Reach

2 FLUTES | SEMI FINISHING | FINISHING | RIB MINATURE | MILLING SOFT MATERIAL | HSC HIGH SPEED

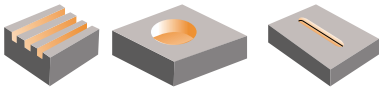

Uncoated Tool Number	Coated Tool Number	Size D1	Shank D2	Neck D3	O.A.L L1	L.O.C. L2	Reach L3	Radius R	Flutes Z
340-2010-6	340-2010-6-L	1	4	0.96	45	0.80	6.0	0.5	2
340-2010-7	340-2010-7-L	1	4	0.96	45	0.80	7.0	0.5	2
340-2010-8	340-2010-8-L	1	4	0.96	45	0.80	8.0	0.5	2
340-2010-10	340-2010-10-L	1	4	0.96	45	0.80	10.0	0.5	2
340-2010-12	340-2010-12-L	1	4	0.96	53	0.80	12.0	0.5	2
340-2010-14	340-2010-14-L	1	4	0.96	53	0.80	14.0	0.5	2
340-2010-16	340-2010-16-L	1	4	0.96	53	0.80	16.0	0.5	2
340-2010-18	340-2010-18-L	1	4	0.96	63	0.80	18.0	0.5	2
340-2010-20	340-2010-20-L	1	4	0.96	63	0.80	20.0	0.5	2
340-2012-8	340-2012-8-L	1.2	4	1.15	45	1.00	8.0	0.6	2
340-2012-12	340-2012-12-L	1.2	4	1.15	53	1.00	12.0	0.6	2
340-2012-16	340-2012-16-L	1.2	4	1.15	53	1.00	16.0	0.6	2
340-2012-20	340-2012-20-L	1.2	4	1.15	63	1.00	20.0	0.6	2
340-2015-4	340-2015-4-L	1.5	4	1.44	45	1.20	4.0	0.75	2
340-2015-8	340-2015-8-L	1.5	4	1.44	45	1.20	8.0	0.75	2
340-2015-12	340-2015-12-L	1.5	4	1.44	53	1.20	12.0	0.75	2
340-2015-16	340-2015-16-L	1.5	4	1.44	53	1.20	16.0	0.75	2
340-2015-20	340-2015-20-L	1.5	4	1.44	63	1.20	20.0	0.75	2
340-2020-3	340-2020-3-L	2	4	1.92	45	1.60	3.0	1	2
340-2020-4	340-2020-4-L	2	4	1.92	45	1.60	4.0	1	2
340-2020-6	340-2020-6-L	2	4	1.92	45	1.60	6.0	1	2
340-2020-8	340-2020-8-L	2	4	1.92	45	1.60	8.0	1	2
340-2020-10	340-2020-10-L	2	4	1.92	45	1.60	10.0	1	2
340-2020-12	340-2020-12-L	2	4	1.92	53	1.60	12.0	1	2
340-2020-16	340-2020-16-L	2	4	1.92	53	1.60	16.0	1	2
340-2020-20	340-2020-20-L	2	4	1.92	63	1.60	20.0	1	2
340-2020-25	340-2020-25-L	2	4	1.92	63	1.60	25.0	1	2
340-2020-30	340-2020-30-L	2	4	1.92	75	1.60	30.0	1	2
340-2020-35	340-2020-35-L	2	4	1.92	75	1.60	35.0	1	2
340-2020-40	340-2020-40-L	2	4	1.92	75	1.60	40.0	1	2
340-2030-8	340-2030-8-L	3	6	2.90	50	2.40	8.0	1.5	2
340-2030-10	340-2030-10-L	3	6	2.90	50	2.40	10.0	1.5	2
340-2030-16	340-2030-16-L	3	6	2.90	63	2.40	16.0	1.5	2
340-2030-25	340-2030-25-L	3	6	2.90	63	2.40	25.0	1.5	2
340-2030-30	340-2030-30-L	3	6	2.90	75	2.40	30.0	1.5	2
340-2030-35	340-2030-35-L	3	6	2.90	75	2.40	35.0	1.5	2

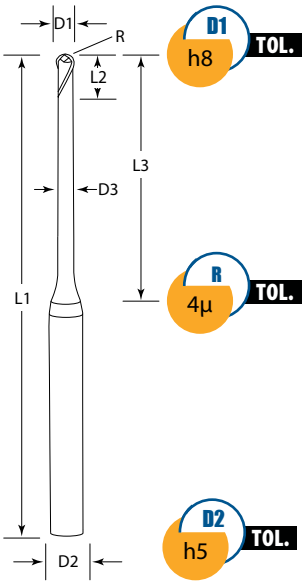

Special Tool Features and Advantages

- ★ Highest Tolerance Accuracy
- ★ Special Neck Form for Greater Reach
- ★ Superior Grinding Finish
- ★ Highest Grinding Accuracy

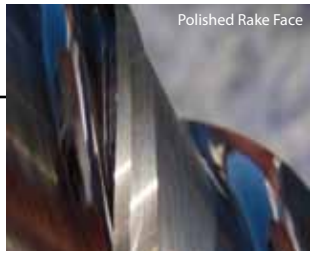

Shown uncoated (left) and coated (right) with HP coating for aluminum and non-ferrous materials ("L").
For more coating information please refer to page 4.

Tool Series 343 • HSC Miniature Hard Milling Carbide End Mills – Long Reach

2 FLUTES | SEMI FINISHING | FINISHING | RIB MINATURE | MILLING HARD MATERIAL | HSC HIGH SPEED | PVD SPECIAL COATING

Uncoated Tool Number	Coated Tool Number	Size D1	Shank D2	Neck D3	O.A.L L1	L.O.C. L2	Reach L3	Radius R	Flutes Z
343-2001-0.2	343-2001-0.2-R	0.1	4	0.08	45	0.08	0.2	0.05	2
343-2001-0.3	343-2001-0.3-R	0.1	4	0.08	45	0.08	0.3	0.05	2
343-2001-0.5	343-2001-0.5-R	0.1	4	0.08	45	0.08	0.5	0.05	2
343-2002-0.5	343-2002-0.5-R	0.2	4	0.17	45	0.15	0.5	0.1	2
343-2002-1	343-2002-1-R	0.2	4	0.17	45	0.15	1.0	0.1	2
343-2002-1.5	343-2002-1.5-R	0.2	4	0.17	45	0.15	1.5	0.1	2
343-2002-2	343-2002-2-R	0.2	4	0.17	45	0.15	2.0	0.1	2
343-2003-1	343-2003-1-R	0.3	4	0.27	45	0.24	1.0	0.15	2
343-2003-1.5	343-2003-1.5-R	0.3	4	0.27	45	0.24	1.5	0.15	2
343-2003-2	343-2003-2-R	0.3	4	0.27	45	0.24	2.0	0.15	2
343-2003-2.5	343-2003-2.5-R	0.3	4	0.27	45	0.24	2.5	0.15	2
343-2003-3	343-2003-3-R	0.3	4	0.27	45	0.24	3.0	0.15	2
343-2003-6	343-2003-6-R	0.3	4	0.27	45	0.24	6.0	0.15	2
343-2004-1	343-2004-1-R	0.4	4	0.37	45	0.30	1.0	0.2	2
343-2004-2	343-2004-2-R	0.4	4	0.37	45	0.30	2.0	0.2	2
343-2004-3	343-2004-3-R	0.4	4	0.37	45	0.30	3.0	0.2	2
343-2004-4	343-2004-4-R	0.4	4	0.37	45	0.30	4.0	0.2	2
343-2004-6	343-2004-6-R	0.4	4	0.37	45	0.30	6.0	0.2	2
343-2004-8	343-2004-8-R	0.4	4	0.37	45	0.30	8.0	0.2	2
343-2005-1	343-2005-1-R	0.5	4	0.47	45	0.35	1.0	0.25	2
343-2005-2	343-2005-2-R	0.5	4	0.47	45	0.35	2.0	0.25	2
343-2005-3	343-2005-3-R	0.5	4	0.47	45	0.35	3.0	0.25	2
343-2005-4	343-2005-4-R	0.5	4	0.47	45	0.35	4.0	0.25	2
343-2005-5	343-2005-5-R	0.5	4	0.47	45	0.35	5.0	0.25	2
343-2005-6	343-2005-6-R	0.5	4	0.47	45	0.35	6.0	0.25	2
343-2005-8	343-2005-8-R	0.5	4	0.47	45	0.35	8.0	0.25	2
343-2005-10	343-2005-10-R	0.5	4	0.47	45	0.35	10.0	0.25	2
343-2006-2	343-2006-2-R	0.6	4	0.57	45	0.40	2.0	0.3	2
343-2006-4	343-2006-4-R	0.6	4	0.57	45	0.40	4.0	0.3	2
343-2006-6	343-2006-6-R	0.6	4	0.57	45	0.40	6.0	0.3	2
343-2006-8	343-2006-8-R	0.6	4	0.57	45	0.40	8.0	0.3	2
343-2006-10	343-2006-10-R	0.6	4	0.57	45	0.40	10.0	0.3	2
343-2006-12	343-2006-12-R	0.6	4	0.57	53	0.40	12.0	0.3	2
343-2008-2	343-2008-2-R	0.8	4	0.77	45	0.50	2.0	0.4	2
343-2008-4	343-2008-4-R	0.8	4	0.77	45	0.50	4.0	0.4	2
343-2008-6	343-2008-6-R	0.8	4	0.77	45	0.50	6.0	0.4	2

*Best Carbide recommends hard milling applications only in coated conditions.

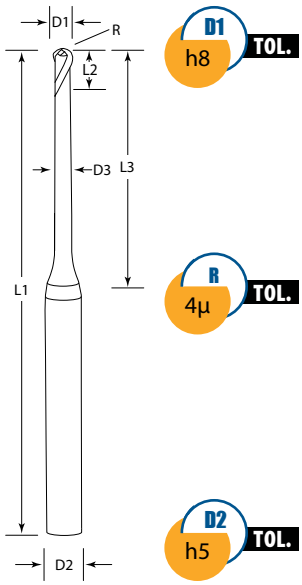

Special Tool Features and Advantages

- ★ Highest Tolerance Accuracy
- ★ Special Neck Form for Greater Reach
- ★ Superior Grinding Finish
- ★ Highest Grinding Accuracy

*Shown uncoated (left) and coated (right) with nano composite coating ("R").
For more coating information please refer to page 4.

Tool Series 343 • HSC Miniature Hard Milling Carbide End Mills – Long Reach

2 FLUTES | SEMI FINISHING | FINISHING | RIB MINATURE | MILLING HARD MATERIAL | HSC HIGH SPEED | PVD SPECIAL COATING

Uncoated Tool Number	Coated Tool Number	Size D1	Shank D2	Neck D3	O.A.L L1	L.O.C. L2	Reach L3	Radius R	Flutes Z
343-2008-8	343-2008-8-R	0.8	4	0.77	45	0.50	8.0	0.4	2
343-2008-10	343-2008-10-R	0.8	4	0.77	45	0.50	10.0	0.4	2
343-2008-12	343-2008-12-R	0.8	4	0.77	53	0.50	12.0	0.4	2
343-2008-16	343-2008-16-R	0.8	4	0.77	53	0.50	16.0	0.4	2
343-2010-2	343-2010-2-R	1	4	0.96	45	0.80	2.0	0.5	2
343-2010-3	343-2010-3-R	1	4	0.96	45	0.80	3.0	0.5	2
343-2010-4	343-2010-4-R	1	4	0.96	45	0.80	4.0	0.5	2
343-2010-6	343-2010-6-R	1	4	0.96	45	0.80	6.0	0.5	2
343-2010-7	343-2010-7-R	1	4	0.96	45	0.80	7.0	0.5	2
343-2010-8	343-2010-8-R	1	4	0.96	45	0.80	8.0	0.5	2
343-2010-10	343-2010-10-R	1	4	0.96	45	0.80	10.0	0.5	2
343-2010-12	343-2010-12-R	1	4	0.96	53	0.80	12.0	0.5	2
343-2010-14	343-2010-14-R	1	4	0.96	53	0.80	14.0	0.5	2
343-2010-16	343-2010-16-R	1	4	0.96	53	0.80	16.0	0.5	2
343-2010-18	343-2010-18-R	1	4	0.96	63	0.80	18.0	0.5	2
343-2010-20	343-2010-20-R	1	4	0.96	63	0.80	20.0	0.5	2
343-2012-8	343-2012-8-R	1.2	4	1.15	45	1.00	8.0	0.6	2
343-2012-12	343-2012-12-R	1.2	4	1.15	53	1.00	12.0	0.6	2
343-2012-16	343-2012-16-R	1.2	4	1.15	53	1.00	16.0	0.6	2
343-2012-20	343-2012-20-R	1.2	4	1.15	63	1.00	20.0	0.6	2
343-2014-8	343-2014-8-R	1.4	4	1.34	45	1.10	8.0	0.7	2
343-2014-12	343-2014-12-R	1.4	4	1.34	53	1.10	12.0	0.7	2
343-2014-16	343-2014-16-R	1.4	4	1.34	53	1.10	16.0	0.7	2
343-2014-20	343-2014-20-R	1.4	4	1.34	63	1.10	20.0	0.7	2
343-2015-4	343-2015-4-R	1.5	4	1.44	45	1.20	4.0	0.75	2
343-2015-8	343-2015-8-R	1.5	4	1.44	45	1.20	8.0	0.75	2
343-2015-12	343-2015-12-R	1.5	4	1.44	53	1.20	12.0	0.75	2
343-2015-16	343-2015-16-R	1.5	4	1.44	53	1.20	16.0	0.75	2
343-2015-20	343-2015-20-R	1.5	4	1.44	63	1.20	20.0	0.75	2
343-2016-8	343-2016-8-R	1.6	4	1.54	45	1.30	8.0	0.8	2
343-2016-12	343-2016-12-R	1.6	4	1.54	53	1.30	12.0	0.8	2
343-2016-16	343-2016-16-R	1.6	4	1.54	53	1.30	16.0	0.8	2
343-2016-20	343-2016-20-R	1.6	4	1.54	63	1.30	20.0	0.8	2
343-2018-8	343-2018-8-R	1.8	4	1.74	45	1.40	8.0	0.9	2
343-2018-12	343-2018-12-R	1.8	4	1.74	53	1.40	12.0	0.9	2
343-2018-16	343-2018-16-R	1.8	4	1.74	53	1.40	16.0	0.9	2

*Best Carbide recommends hard milling applications only in coated conditions.

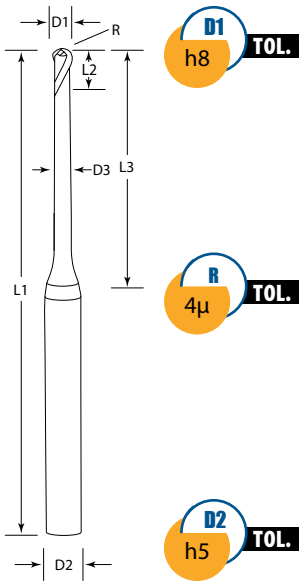

Special Tool Features and Advantages

- ★ Highest Tolerance Accuracy
- ★ Special Neck Form for Greater Reach
- ★ Superior Grinding Finish
- ★ Highest Grinding Accuracy

*Shown uncoated (left) and coated (right) with nano composite coating ("R").
For more coating information please refer to page 4.

Tool Series 343 • HSC Miniature Hard Milling Carbide End Mills – Long Reach

2 FLUTES | SEMI FINISHING | FINISHING | RIB MINATURE | MILLING HARD MATERIAL | HSC HIGH SPEED | PVD SPECIAL COATING

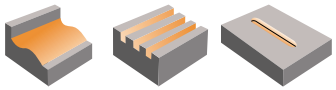

Uncoated Tool Number	Coated Tool Number	Size D1	Shank D2	Neck D3	O.A.L L1	L.O.C. L2	Reach L3	Radius R	Flutes Z
343-2018-20	343-2018-20-R	1.8	4	1.74	63	1.40	20.0	0.9	2
343-2020-3	343-2020-3-R	2	4	1.92	45	1.60	3.0	1	2
343-2020-4	343-2020-4-R	2	4	1.92	45	1.60	4.0	1	2
343-2020-6	343-2020-6-R	2	4	1.92	45	1.60	6.0	1	2
343-2020-8	343-2020-8-R	2	4	1.92	45	1.60	8.0	1	2
343-2020-10	343-2020-10-R	2	4	1.92	45	1.60	10.0	1	2
343-2020-12	343-2020-12-R	2	4	1.92	53	1.60	12.0	1	2
343-2020-16	343-2020-16-R	2	4	1.92	53	1.60	16.0	1	2
343-2020-20	343-2020-20-R	2	4	1.92	63	1.60	20.0	1	2
343-2020-25	343-2020-25-R	2	4	1.92	63	1.60	25.0	1	2
343-2020-30	343-2020-30-R	2	4	1.92	75	1.60	30.0	1	2
343-2020-35	343-2020-35-R	2	4	1.92	75	1.60	35.0	1	2
343-2020-40	343-2020-40-R	2	4	1.92	75	1.60	40.0	1	2
343-2030-8	343-2030-8-R	3	6	2.90	50	2.40	8.0	1.5	2
343-2030-10	343-2030-10-R	3	6	2.90	50	2.40	10.0	1.5	2
343-2030-16	343-2030-16-R	3	6	2.90	53	2.40	16.0	1.5	2
343-2030-25	343-2030-25-R	3	6	2.90	63	2.40	25.0	1.5	2
343-2030-30	343-2030-30-R	3	6	2.90	75	2.40	30.0	1.5	2
343-2030-35	343-2030-35-R	3	6	2.90	75	2.40	35.0	1.5	2
343-2040-10	343-2040-10-R	4	6	3.90	50	3.00	10.0	2	2
343-2040-16	343-2040-16-R	4	6	3.90	63	3.00	16.0	2	2
343-2040-25	343-2040-25-R	4	6	3.90	63	3.00	25.0	2	2
343-2040-35	343-2040-35-R	4	6	3.90	75	3.00	35.0	2	2
343-2040-40	343-2040-40-R	4	6	3.90	75	3.00	40.0	2	2
343-2040-50	343-2040-50-R	4	6	3.90	100	3.00	50.0	2	2
343-2050-25	343-2050-25-R	5	6	4.90	63	3.50	25.0	2.5	2
343-2050-35	343-2050-35-R	5	6	4.90	75	3.50	35.0	2.5	2
343-2050-50	343-2050-50-R	5	6	4.90	100	3.50	50.0	2.5	2
343-2060-30	343-2060-30-R	6	6	5.90	75	4.80	30.0	3	2
343-2060-50	343-2060-50-R	6	6	5.90	100	4.80	50.0	3	2

**Best Carbide recommends hard milling applications only in coated conditions.*

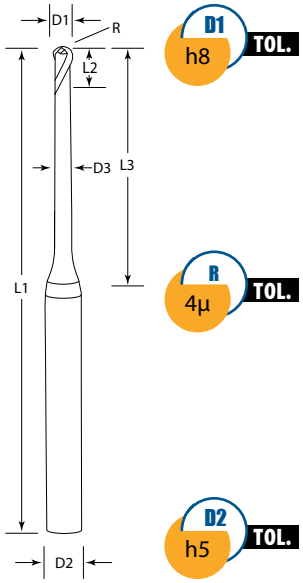

Special Tool Features and Advantages

- ★ Highest Tolerance Accuracy
- ★ Special Neck Form for Greater Reach
- ★ Superior Grinding Finish
- ★ Highest Grinding Accuracy

**Shown uncoated (left) and coated (right) with nano composite coating ("R").*
For more coating information please refer to page 4.

Tool Series 343 • Technical Support

Material		Copper/ Alloy Steels (180-250 HB)			Steels (25-35 HRC)		
D mm	L3 mm	ap mm	n min.	Vf mm/min	ap mm	n min.	Vf mm/min.
0.1	0.2	0.008	50,100	1,503	0.007	50,100	1,503
0.1	0.3	0.006	50,100	1,503	0.005	50,100	1,503
0.1	0.5	0.004	50,100	1,503	0.004	50,100	1,503
0.2	0.5	0.02	50,100	2,255	0.018	45,090	2,029
0.2	1	0.014	50,100	2,255	0.013	45,090	2,029
0.2	1.5	0.008	40,080	1,623	0.007	36,072	1,461
0.2	2	0.008	40,080	1,443	0.007	36,072	1,299
0.3	1	0.021	50,100	2,255	0.019	45,090	2,029
0.3	1.5	0.016	50,100	2,255	0.014	45,090	2,029
0.3	2	0.012	50,100	2,029	0.011	45,090	1,827
0.3	2.5	0.01	45,090	1,827	0.009	40,581	1,643
0.3	3	0.008	40,080	1,443	0.007	36,072	1,299
0.3	6	0.006	34,017	1,224	0.005	30,828	1,110
0.4	1	0.04	40,080	2,405	0.036	36,072	2,164
0.4	2	0.028	40,080	2,405	0.025	36,072	2,164
0.4	3	0.016	36,072	1,948	0.014	32,465	1,754
0.4	4	0.01	32,064	1,539	0.009	28,858	1,385
0.4	6	0.007	28,701	1,378	0.006	25,512	1,224
0.4	8	0.006	28,701	1,263	0.005	25,512	1,122
0.5	1	0.045	40,080	2,405	0.041	36,072	2,164
0.5	2	0.035	40,080	2,405	0.032	36,072	2,164
0.5	3	0.03	36,072	1,948	0.027	32,465	1,754
0.5	4	0.02	36,072	1,948	0.018	32,465	1,754
0.5	5	0.018	32,064	1,539	0.016	28,858	1,385
0.5	6	0.013	32,064	1,539	0.012	28,858	1,385
0.5	8	0.012	31,890	1,339	0.011	28,701	1,205
0.5	10	0.01	23,599	991	0.009	19,134	804
0.6	2	0.042	40,080	3,006	0.038	36,072	2,705
0.6	4	0.024	36,072	2,435	0.022	32,465	2,191
0.6	6	0.015	32,064	1,924	0.014	28,858	1,731
0.6	8	0.015	32,064	1,924	0.014	28,858	1,731
0.6	10	0.009	24-048	1,263	0.008	21,643	1,136
0.6	12	0.007	18,602	818	0.006	15,413	678
0.8	2	0.08	40,080	3,006	0.072	36,072	2,705
0.8	4	0.056	40,080	3,006	0.05	36,072	2,705
0.8	6	0.032	36,072	2,435	0.029	32,465	2,191
0.8	8	0.02	32,064	1,924	0.018	28,858	1,731
0.8	10	0.02	32,064	1,924	0.018	28,858	1,731
0.8	12	0.018	27,904	1,562	0.016	24,714	1,205
0.8	16	0.011	27,904	1,451	0.009	24,714	1,285
1	2	0.1	36,072	3,246	0.09	32,465	2,922
1	3	0.1	36,072	3,246	0.09	32,465	2,922
1	4	0.07	36,072	3,246	0.063	32,465	2,922
1	6	0.04	32,465	2,629	0.036	29,218	2,367
1	7	0.04	32,465	2,629	0.036	29,218	2,367
1	8	0.04	32,465	2,629	0.036	29,218	2,367
1	10	0.025	32,465	2,629	0.023	29,218	2,367
1	12	0.025	28,858	2,078	0.023	25,972	1,870
1	14	0.02	28,858	2,078	0.018	25,972	1,870
1	16	0.015	28,858	1,818	0.014	25,972	1,636
1	18	0.012	21,643	1,364	0.011	19,479	1,227
1	20	0.01	21,643	1,364	0.009	19,479	1,227

This data recommendation applies to highly accurate and rigid machining conditions associated with HSC. It may serve as a general guidance only. The actual cutting parameters may very with each application. A proportional feed rate adjustment is necessary when the actual RPM is lower than the stated recommendation.

Tool Series 343 • Technical Support

Material		Steels (35-45 HRC)			Hardened Steels (45-55 HRC)			Hardened Steels (55-70 HRC)		
D1 mm	L3 mm	ap mm	n min.	Vf mm/min	ap mm	n min.	Vf mm/min.	ap mm	n min.	Vf mm/min
0.1	0.2	0.006	50,100	1,353	0.005	45,090	1,082	0.005	42,084	884
0.1	0.3	0.005	50,100	1,353	0.004	45,090	1,082	0.004	42,084	884
0.1	0.5	0.003	50,100	1,353	0.003	45,090	1,082	0.002	42,084	884
0.2	0.5	0.016	42,585	1,724	0.013	37,575	1,353	0.012	35,070	1,105
0.2	1	0.011	42,585	1,724	0.009	37,575	1,353	0.008	35,070	1,105
0.2	1.5	0.006	34,068	1,380	0.005	30,060	1,082	0.005	28,056	884
0.2	2	0.006	34,068	1,073	0.005	30,060	947	0.005	28,056	758
0.3	1	0.017	42,585	1,724	0.014	37,575	1,353	0.013	35,070	1,105
0.3	1.5	0.013	42,585	1,724	0.01	37,575	1,353	0.01	35,070	1,105
0.3	2	0.01	42,585	1,724	0.008	37,575	1,353	0.007	35,070	1,105
0.3	2.5	0.008	38,327	1,552	0.007	33,818	1,217	0.006	31,563	994
0.3	3	0.006	34,068	1,073	0.005	30,060	947	0.005	28,056	758
0.3	6	0.004	29,765	953	0.003	26,575	744	0.002	24,449	586
0.4	1	0.032	34,068	1,840	0.026	30,060	1,443	0.024	28,056	1,178
0.4	2	0.022	34,068	1,840	0.018	30,060	1,443	0.017	28,056	1,178
0.4	3	0.013	30,661	1,655	0.01	27,054	1,299	0.01	25,250	10,60
0.4	4	0.008	27,254	1,144	0.007	24,048	1,010	0.006	22,445	808
0.4	6	0.005	23,903	1,002	0.004	20,714	662	0.003	19,121	535
0.4	8	0.004	23,902	765	0.003	20,714	580	0.002	19,121	459
0.5	1	0.036	34,068	1,840	0.029	30,060	1,443	0.027	28,056	1,178
0.5	2	0.028	34,068	1,840	0.023	30,060	1,443	0.021	28,056	1,178
0.5	3	0.024	30,661	1,655	0.02	27,054	1,299	0.018	25,250	1,060
0.5	4	0.016	30,661	1,655	0.013	27,054	1,299	0.012	25,250	1,060
0.5	5	0.014	27,254	1,144	0.012	24,048	1,010	0.011	22,445	808
0.5	6	0.01	27,254	1,144	0.008	24,048	1,010	0.008	22,445	808
0.5	8	0.009	26,787	964	0.007	23,599	756	0.006	22,323	625
0.5	10	0.007	17,859	642	0.005	17,859	501	0.004	16,627	399
0.6	2	0.034	34,068	2,300	0.027	30,060	1,804	0.025	28,056	1,473
0.6	4	0.019	30,661	2,070	0.016	27,054	1,623	0.014	25,250	1,326
0.6	6	0.012	27,254	1,431	0.01	24,048	1,263	0.009	22,445	1,010
0.6	8	0.012	27,254	1,431	0.01	24,048	1,263	0.009	22,445	1,010
0.6	10	0.007	20,441	997	0.006	18,036	812	0.005	16,834	631
0.6	12	0.006	13,820	552	0.005	15,932	605	0.004	14,870	446
0.8	2	0.064	34,068	2,300	0.052	30,060	1,804	0.048	28,056	1,473
0.8	4	0.045	34,068	2,300	0.036	30,060	1,804	0.034	28,056	1,473
0.8	6	0.026	30,661	2,070	0.021	27,054	1,623	0.019	25,250	1,326
0.8	8	0.016	27,254	1,431	0.013	24,048	1,263	0.012	22,445	1,010
0.8	10	0.016	27,254	1,431	0.013	24,048	1,263	0.012	22,445	1,010
0.8	12	0.014	23,120	1,109	0.011	20,330	976	0.01	19,134	804
0.8	16	0.008	23,120	1,109	0.008	20,330	976	0.007	19,134	804
1	2	0.08	30,661	2,484	0.065	27,054	1,948	0.06	25,250	1,591
1	3	0.08	30,661	2,484	0.065	27,054	1,948	0.06	25,250	1,591
1	4	0.056	30,661	2,484	0.046	27,054	1,948	0.042	25,250	1,591
1	6	0.032	27,595	2,235	0.026	24,349	1,754	0.024	22,725	1,432
1	7	0.032	27,595	2,235	0.026	24,349	1,754	0.024	22,725	1,432
1	8	0.032	27,595	2,235	0.026	24,349	1,754	0.024	22,725	1,432
1	10	0.02	27,595	2,235	0.016	24,349	1,754	0.015	22,725	1,432
1	12	0.02	24,529	1,545	0.016	21,643	1,364	0.015	20,200	1,091
1	14	0.016	24,529	1,545	0.013	21,643	1,364	0.012	20,200	1,091
1	16	0.012	24,529	1,435	0.01	21,643	1,168	0.009	20,200	909
1	18	0.01	18,397	1,076	0.008	16,232	877	0.007	15,150	681
1	20	0.008	18,397	1,076	0.007	16,232	877	0.006	15,150	681

This data recommendation applies to highly accurate and rigid machining conditions associated with HSC. It may serve as a general guidance only. The actual cutting parameters may very with each application. A proportional feed rate adjustment is necessary when the actual RPM is lower than the stated recommendation.

Tool Series 343 • Technical Support

Material		Copper/ Carbin & Alloy Steels (180-250 HB)			Steels (25-35 HRC)		
D mm	L3 mm	ap mm	n min.	Vf mm/min	ap mm	n min.	Vf mm/min.
1.2	8	0.04	28,858	2,338	0.036	25,972	2,104
1.2	12	0.03	28,858	2,338	0.027	25,972	2,104
1.2	16	0.018	25,512	1,837	0.015	22,855	1,645
1.2	20	0.012	25,512	1,837	0.01	22,855	1,645
1.4	8	0.055	25,250	2,045	0.05	22,725	1,841
1.4	12	0.035	25,250	2,045	0.032	22,725	1,841
1.4	16	0.035	22,445	1,616	0.032	20,200	1,455
1.4	20	0.035	22,445	1,616	0.032	20,200	1,455
1.5	4	0.1	28,056	2,525	0.09	25,250	2,273
1.5	8	0.06	25,250	2,045	0.054	22,725	1,841
1.5	12	0.06	25,250	2,045	0.054	22,725	1,841
1.5	16	0.038	22,445	1,616	0.034	20,200	1,455
1.5	20	0.038	22,445	1,616	0.034	20,200	1,455
1.6	8	0.11	26,052	2,605	0.099	23,447	2,345
1.6	12	0.065	23,447	2,110	0.059	21,102	1,899
1.6	16	0.04	20,842	1,667	0.036	18,757	1,501
1.6	20	0.04	20,842	1,667	0.036	18,757	1,501
1.8	8	0.13	26,052	2,605	0.117	23,447	2,345
1.8	12	0.07	23,447	2,110	0.063	21,102	1,899
1.8	16	0.045	23,447	2,110	0.041	21,102	1,899
1.8	20	0.045	20,842	1,667	0.041	18,757	1,501
2	3	0.2	21,042	3,156	0.18	18,938	2,841
2	4	0.2	21,042	3,156	0.18	18,938	2,841
2	6	0.2	21,042	3,156	0.18	18,938	2,841
2	8	0.14	21,042	3,156	0.126	18,938	2,841
2	10	0.14	21,042	3,156	0.126	18,938	2,841
2	12	0.08	18,938	2,557	0.072	17,044	2,301
2	16	0.08	18,938	2,557	0.072	17,044	2,301
2	20	0.05	18,938	2,557	0.045	17,044	2,301
2	25	0.05	16,834	2,020	0.045	15,150	1,818
2	30	0.03	16,834	2,020	0.027	15,150	1,818
2	35	0.025	12,625	1,326	0.023	11,363	1,193
2	40	0.022	12,625	1,326	0.02	11,363	1,193
3	8	0.301	16,032	2,405	0.271	14,429	2,164
3	10	0.21	16,032	2,405	0.189	14,429	2,164
3	16	0.21	14,429	1,948	0.189	12,986	1,754
3	25	0.08	14,429	1,948	0.072	12,986	1,754
3	30	0.08	12,826	1,539	0.072	11,543	1,385
3	35	0.08	12,826	1,539	0.072	11,543	1,385
4	10	0.401	11,523	2,305	0.361	10,371	2,074
4	16	0.281	11,523	2,305	0.253	10,371	2,074
4	25	0.16	10,371	1,867	0.144	9,334	1,680
4	35	0.1	10,371	1,867	0.09	9,334	1,680
4	40	0.1	9,218	1,475	0.09	8,297	1,328
4	50	0.1	9,218	1,475	0.09	8,297	1,328
5	25	0.351	9,018	2,255	0.316	8,116	2,029
5	35	0.2	8,116	1,827	0.18	7,305	1,643
5	50	0.18	7,015	1,403	0.16	6,123	1,224
6	30	0.421	8,016	2,004	0.379	7,214	1,804
6	50	0.15	7,214	1,623	0.135	6,493	1,461

This data recommendation applies to highly accurate and rigid machining conditions associated with HSC. It may serve as a general guidance only. The actual cutting parameters may very with each application. A proportional feed rate adjustment is necessary when the actual RPM is lower than the stated recommendation.

Tool Series 343 • Technical Support

Material		Steels (35-45 HRC)			Hardened Steels (45-55 HRC)			Hardened Steels (55-70 HRC)		
D1 mm	L3 mm	ap mm	n min.	Vf mm/min	ap mm	n min.	Vf mm/min.	ap mm	n min.	Vf mm/min
1.2	8	0.032	24,529	1,987	0.026	21,643	1,558	0.024	20,200	1,273
1.2	12	0.024	24,529	1,987	0.02	21,643	1,558	0.018	20,200	1,273
1.2	16	0.012	21,791	1,395	0.01	19,134	1,224	0.008	17,539	947
1.2	20	0.009	21,791	1,395	0.008	19,134	1,224	0.006	17,539	947
1.4	8	0.044	21,463	1,738	0.036	18,938	1,364	0.033	17,675	1,113
1.4	12	0.028	21,463	1,738	0.023	18,938	1,364	0.021	17,675	1,113
1.4	16	0.028	19,078	1,202	0.023	16,834	1,060	0.021	15,711	849
1.4	20	0.028	19,078	1,202	0.023	16,834	1,060	0.021	15,711	849
1.5	4	0.08	23,848	1,932	0.065	21,042	1,515	0.06	19,639	1,237
1.5	8	0.048	21,463	1,738	0.039	18,938	1,364	0.036	17,675	1,113
1.5	12	0.048	21,463	1,738	0.039	18,938	1,364	0.036	17,675	1,113
1.5	16	0.03	19,078	1,202	0.025	16,834	1,060	0.023	15,711	849
1.5	20	0.03	19,078	1,202	0.025	16,834	1,060	0.023	15,711	849
1.6	8	0.088	22,144	1,993	0.072	19,539	1,563	0.066	18,236	1,277
1.6	12	0.052	19,930	1,794	0.042	17,585	1,407	0.039	16,413	1,149
1.6	16	0.032	17,715	1,240	0.026	15,631	1,094	0.024	14,589	876
1.6	20	0.032	17,715	1,240	0.026	15,631	1,094	0.024	14,589	876
1.8	8	0.104	22,144	1,993	0.085	19,539	1,563	0.078	18,236	1,277
1.8	12	0.056	19,930	1,794	0.046	17,858	1,407	0.042	16,413	1,149
1.8	16	0.036	19,930	1,794	0.029	17,858	1,407	0.027	16,413	1,149
1.8	20	0.036	17,715	1,240	0.029	15,631	1,094	0.027	14,589	876
2	3	0.16	17,886	2,415	0.13	15,782	1,894	0.12	14,729	1,547
2	4	0.16	17,886	2,415	0.13	15,782	1,894	0.12	14,729	1,547
2	6	0.16	17,886	2,683	0.13	15,782	1,894	0.12	14,729	1,547
2	8	0.112	17,886	2,683	0.091	15,782	1,894	0.084	14,729	1,547
2	10	0.112	17,886	2,683	0.091	15,782	1,894	0.084	14,729	1,547
2	12	0.064	16,097	2,173	0.052	14,203	1,704	0.048	13,256	1,392
2	16	0.064	16,097	2,173	0.052	14,203	1,704	0.048	13,256	1,392
2	20	0.04	16,097	2,173	0.033	14,203	1,704	0.03	13,256	1,392
2	25	0.04	14,309	1,502	0.033	12,625	1,326	0.03	11,784	1,060
2	30	0.024	14,309	1,502	0.02	12,625	1,326	0.018	11,784	1,060
2	35	0.02	10,731	1,046	0.015	9,469	853	0.015	8,838	663
2	40	0.018	10,731	1,046	0.014	9,469	853	0.013	8,838	663
3	8	0.24	13,627	1,840	0.195	12,024	1,443	0.18	11,222	1,178
3	10	0.168	13,627	2,044	0.137	12,024	1,443	0.126	11,222	1,178
3	16	0.168	12,264	1,655	0.137	10,822	1,299	0.126	10,100	1,060
3	25	0.064	12,264	1,655	0.052	10,822	1,299	0.048	10,100	1,060
3	30	0.064	10,902	1,144	0.052	9,619	1,010	0.048	8,978	808
3	35	0.064	10,902	1,144	0.052	9,619	1,010	0.048	8,978	808
4	10	0.321	9,795	1,764	0.261	8,642	1,383	0.24	8,066	1,129
4	16	0.224	9,795	1,959	0.182	8,642	1,383	0.168	8,066	1,129
4	25	0.128	8,816	1,587	0.104	7,779	1,244	0.096	7,259	1,016
4	35	0.08	8,816	1,587	0.065	7,779	1,244	0.06	7,259	1,016
4	40	0.08	7,836	1,097	0.065	6,914	968	0.06	6,453	775
4	50	0.08	7,836	1,097	0.065	6,914	968	0.06	6,453	775
5	25	0.281	7,665	1,917	0.228	6,764	1,353	0.21	6,313	1,105
5	35	0.16	6,889	1,552	0.13	6,087	1,217	0.12	5,681	994
5	50	0.14	5,739	1,147	0.11	4,911	884	0.098	4,528	706
6	30	0.337	6,814	1,703	0.274	6,012	1,202	0.253	5,611	982
6	50	0.12	6,132	1,380	0.098	5,411	1,082	0.09	5,050	884

This data recommendation applies to highly accurate and rigid machining conditions associated with HSC. It may serve as a general guidance only. The actual cutting parameters may very with each application. A proportional feed rate adjustment is necessary when the actual RPM is lower than the stated recommendation.

Tool Series 350ZC • HSC Diamond Coated Carbide End Mills for Graphite

2 FLUTES | SEMI FINISHING | FINISHING | HSC HIGH SPEED | PVD SPECIAL COATING | CVD DIAMOND COATING

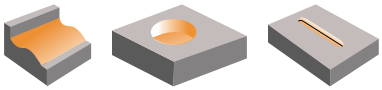

Coated Tool Number	Size D1	Shank D2	Neck D3	O.A.L L1	L.O.C. L2	Reach L3	Radius R	Flutes Z
350-2003-1-ZC	0.3	4	0.27	45	0.40	1.0	0.15	2
350-2003-2-ZC	0.3	4	0.27	45	0.40	2.0	0.15	2
350-2003-3-ZC	0.3	4	0.27	45	0.40	3.0	0.15	2
350-2004-2-ZC	0.4	4	0.36	45	0.50	2.0	0.20	2
350-2004-4-ZC	0.4	4	0.36	45	0.50	4.0	0.20	2
350-2004-6-ZC	0.4	4	0.36	60	0.50	6.0	0.20	2
350-2004-8-ZC	0.4	4	0.36	60	0.50	8.0	0.20	2
350-2005-2-ZC	0.5	4	0.47	45	0.60	2.0	0.25	2
350-2005-5-ZC	0.5	4	0.47	45	0.60	5.0	0.25	2
350-2005-8-ZC	0.5	4	0.47	60	0.60	8.0	0.25	2
350-2005-10-ZC	0.5	4	0.47	60	0.60	10.0	0.25	2
350-2006-3-ZC	0.6	4	0.57	60	0.80	3.0	0.30	2
350-2006-4-ZC	0.6	4	0.57	60	0.80	4.0	0.30	2
350-2006-6-ZC	0.6	4	0.57	60	0.80	6.0	0.30	2
350-2006-8-ZC	0.6	4	0.57	60	0.80	8.0	0.30	2
350-2006-9-ZC	0.6	4	0.57	60	0.80	9.0	0.30	2
350-2006-10-ZC	0.6	4	0.57	60	0.80	10.0	0.30	2
350-2006-12-ZC	0.6	4	0.57	60	0.80	12.0	0.30	2
350-2008-4-ZC	0.8	4	0.77	60	1.00	4.0	0.40	2
350-2008-6-ZC	0.8	4	0.77	60	1.00	6.0	0.40	2
350-2008-8-ZC	0.8	4	0.77	60	1.00	8.0	0.40	2
350-2008-10-ZC	0.8	4	0.77	60	1.00	10.0	0.40	2
350-2008-12-ZC	0.8	4	0.77	60	1.00	12.0	0.40	2
350-2008-14-ZC	0.8	4	0.77	60	1.00	14.0	0.40	2
350-2008-16-ZC	0.8	4	0.77	60	1.00	16.0	0.40	2
350-2010-5-ZC	1	4	0.96	60	1.20	5.0	0.50	2
350-2010-10-ZC	1	4	0.96	60	1.20	10.0	0.50	2
350-2010-15-ZC	1	4	0.96	60	1.20	15.0	0.50	2
350-2010-20-ZC	1	4	0.96	60	1.20	20.0	0.50	2

Minimum order required. Contact sales@bestcarbide.com

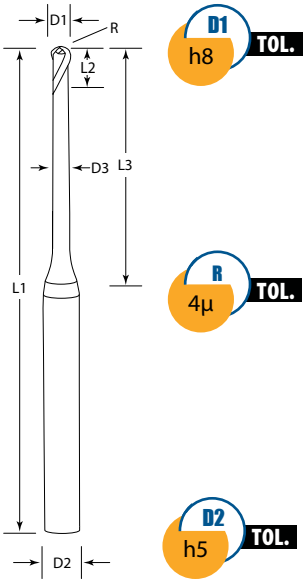

Special Tool Features and Advantages

- ★ True Diamond Coating (CVD)
- ★ Highest Grinding Accuracy
- ★ Special Neck Form for Greater Reach
- ★ Superior Grinding Finish

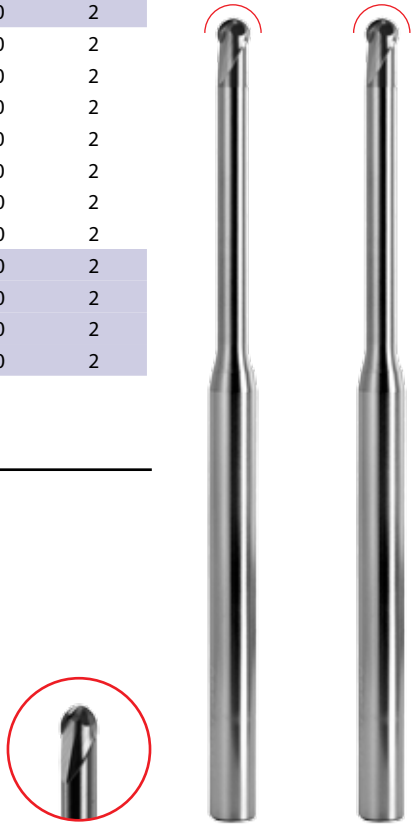

Shown coated with CVD diamond Classic coating ("ZC"). For more coating information please refer to page 4.

Tool Series 350ZC • HSC Diamond Coated Carbide End Mills for Graphite

2 FLUTES | SEMI FINISHING | FINISHING | HSC HIGH SPEED | PVD SPECIAL COATING | CVD DIAMOND COATING

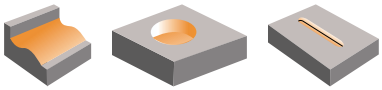

Coated Tool Number	Size D1	Shank D2	Neck D3	O.A.L L1	L.O.C. L2	Reach L3	Radius R	Flutes Z
350-2015-5-ZC	1.5	4	1.44	60	1.80	5.0	0.75	2
350-2015-10-ZC	1.5	4	1.44	60	1.80	10.0	0.75	2
350-2015-15-ZC	1.5	4	1.44	60	1.80	15.0	0.75	2
350-2015-20-ZC	1.5	4	1.44	60	1.80	20.0	0.75	2
350-2005-25-ZC	1.5	4	1.44	60	1.80	25.0	0.75	2
350-2020-10-ZC	2	4	1.92	60	2.00	10.0	1	2
350-2020-15-ZC	2	4	1.92	60	2.00	15.0	1	2
350-2020-20-ZC	2	4	1.92	60	2.00	20.0	1	2
350-2020-25-ZC	2	4	1.92	60	2.00	25.0	1	2
350-2030-10-ZC	3	6	2.86	60	3.00	10.0	1.50	2
350-2030-15-ZC	3	6	2.86	60	3.00	15.0	1.50	2
350-2030-20-ZC	3	6	2.86	60	3.00	20.0	1.50	2
350-2030-25-ZC	3	6	2.86	60	3.00	25.0	1.50	2
350-2030-30-ZC	3	6	2.86	75	3.00	30.0	1.50	2
350-2040-10-ZC	4	6	3.90	60	3.00	10.0	2	2
350-2040-15-ZC	4	6	3.90	60	3.00	15.0	2	2
350-2040-20-ZC	4	6	3.90	60	3.00	20.0	2	2
350-2040-30-ZC	4	6	3.90	75	3.00	30.0	2	2
350-2040-40-ZC	4	6	3.90	100	3.00	40.0	2	2
350-2060-20-ZC	6	6	5.90	75	4.80	20.0	3	2
350-2060-30-ZC	6	6	5.90	75	4.80	30.0	3	2
350-2060-40-ZC	6	6	5.90	100	4.80	40.0	3	2
350-2060-50-ZC	6	6	5.90	100	4.80	50.0	3	2
350-2060-60-ZC	6	6	5.90	100	4.80	60.0	3	2

**Minimum order required. Contact sales@bestcarbide.com*

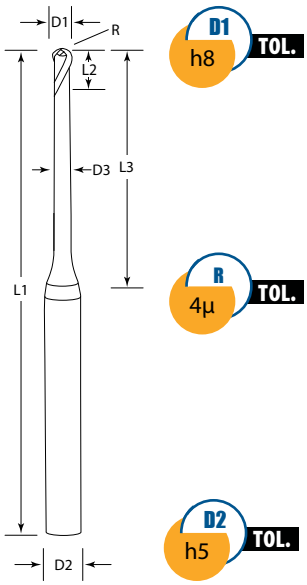

Special Tool Features and Advantages

- ★ True Diamond Coating (CVD)
- ★ Highest Grinding Accuracy
- ★ Special Neck Form for Greater Reach
- ★ Superior Grinding Finish

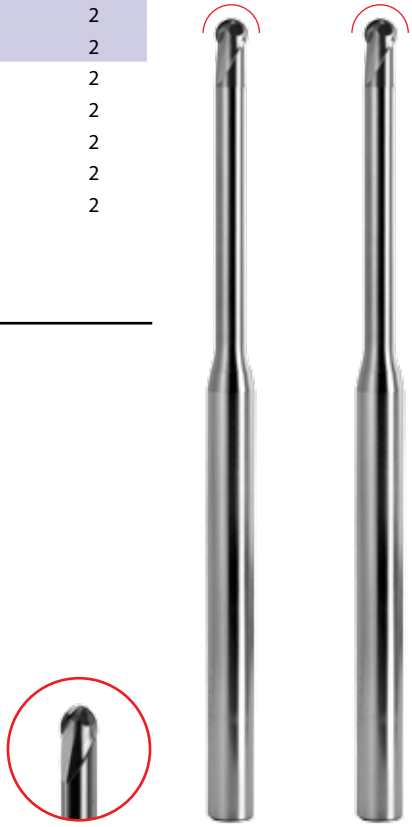

**Shown coated with CVD diamond Classic coating ("ZC"). For more coating information please refer to page 4.*

Tool Series 350ZP • HSC Diamond Coated Carbide End Mills for Composites

2 FLUTES | SEMI FINISHING | FINISHING | RIB MINATURE | HSC HIGH SPEED | PVD SPECIAL COATING | CVD DIAMOND COATING

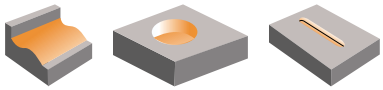

Coated Tool Number	Size D1	Shank D2	Neck D3	O.A.L L1	L.O.C. L2	Reach L3	Radius R	Flutes Z
350-2003-1-ZP	0.3	4	0.27	45	0.40	1.0	0.15	2
350-2003-2-ZP	0.3	4	0.27	45	0.40	2.0	0.15	2
350-2003-3-ZP	0.3	4	0.27	45	0.40	3.0	0.15	2
350-2004-2-ZP	0.4	4	0.36	45	0.50	2.0	0.20	2
350-2004-4-ZP	0.4	4	0.36	45	0.50	4.0	0.20	2
350-2004-6-ZP	0.4	4	0.36	60	0.50	6.0	0.20	2
350-2004-8-ZP	0.4	4	0.36	60	0.50	8.0	0.20	2
350-2005-2-ZP	0.5	4	0.47	45	0.60	2.0	0.25	2
350-2005-5-ZP	0.5	4	0.47	45	0.60	5.0	0.25	2
350-2005-8-ZP	0.5	4	0.47	60	0.60	8.0	0.25	2
350-2005-10-ZP	0.5	4	0.47	60	0.60	10.0	0.25	2
350-2006-3-ZP	0.6	4	0.57	60	0.80	3.0	0.30	2
350-2006-4-ZP	0.6	4	0.57	60	0.80	4.0	0.30	2
350-2006-6-ZP	0.6	4	0.57	60	0.80	6.0	0.30	2
350-2006-8-ZP	0.6	4	0.57	60	0.80	8.0	0.30	2
350-2006-9-ZP	0.6	4	0.57	60	0.80	9.0	0.30	2
350-2006-10-ZP	0.6	4	0.57	60	0.80	10.0	0.30	2
350-2006-12-ZP	0.6	4	0.57	60	0.80	12.0	0.30	2
350-2008-4-ZP	0.8	4	0.77	60	1.00	4.0	0.40	2
350-2008-6-ZP	0.8	4	0.77	60	1.00	6.0	0.40	2
350-2008-8-ZP	0.8	4	0.77	60	1.00	8.0	0.40	2
350-2008-10-ZP	0.8	4	0.77	60	1.00	10.0	0.40	2
350-2008-12-ZP	0.8	4	0.77	60	1.00	12.0	0.40	2
350-2008-14-ZP	0.8	4	0.77	60	1.00	14.0	0.40	2
350-2008-16-ZP	0.8	4	0.77	60	1.00	16.0	0.40	2
350-2010-5-ZP	1	4	0.96	60	1.20	5.0	0.50	2
350-2010-10-ZP	1	4	0.96	60	1.20	10.0	0.50	2
350-2010-15-ZP	1	4	0.96	60	1.20	15.0	0.50	2
350-2010-20-ZP	1	4	0.96	60	1.20	20.0	0.50	2

**Minimum order required. Contact sales@bestcarbide.com*

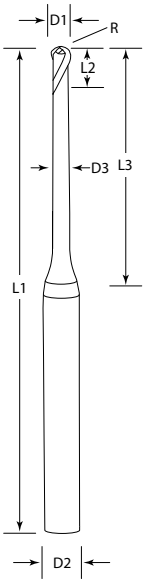

D1 h8 TOL.

R 4µ TOL.

D2 h5 TOL.

Special Tool Features and Advantages

- ★ True Diamond Coating (CVD)
- ★ Special Neck Form for Greater Reach
- ★ Highest Grinding Accuracy
- ★ Superior Grinding Finish

**Shown coated with CVD diamond Plus coating ("ZP"). For more coating information please refer to page 4.*

Tool Series 350ZP • HSC Diamond Coated Carbide End Mills for Composites

2 FLUTES | SEMI FINISHING | FINISHING | RIB MINATURE | HSC HIGH SPEED | PVD SPECIAL COATING | CVD DIAMOND COATING

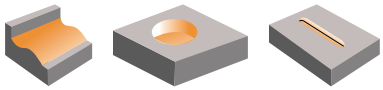

Coated Tool Number	Size D1	Shank D2	Neck D3	O.A.L L1	L.O.C. L2	Reach L3	Radius R	Flutes Z
350-2015-5-ZP	1.5	4	1.44	60	1.80	5.0	0.75	2
350-2015-10-ZP	1.5	4	1.44	60	1.80	10.0	0.75	2
350-2015-15-ZP	1.5	4	1.44	60	1.80	15.0	0.75	2
350-2015-20-ZP	1.5	4	1.44	60	1.80	20.0	0.75	2
350-2015-25-ZP	1.5	4	1.44	60	1.80	25.0	0.75	2
350-2020-10-ZP	2	4	1.92	60	2.00	10.0	1	2
350-2020-15-ZP	2	4	1.92	60	2.00	15.0	1	2
350-2020-20-ZP	2	4	1.92	60	2.00	20.0	1	2
350-2020-25-ZP	2	4	1.92	60	2.00	25.0	1	2
350-2030-10-ZP	3	6	2.86	60	3.00	10.0		2
350-2030-15-ZP	3	6	2.86	60	3.00	15.0	1.50	2
350-2030-20-ZP	3	6	2.86	60	3.00	20.0	1.50	2
350-2030-25-ZP	3	6	2.86	60	3.00	25.0	1.50	2
350-2030-30-ZP	3	6	2.86	75	3.00	30.0	1.50	2
350-2040-10-ZP	4	6	3.90	60	3.00	10.0	2	2
350-2040-15-ZP	4	6	3.90	60	3.00	15.0	2	2
350-2040-20-ZP	4	6	3.90	60	3.00	20.0	2	2
350-2040-30-ZP	4	6	3.90	75	3.00	30.0	2	2
350-2040-40-ZP	4	6	3.90	100	3.00	40.0	2	2
350-2060-20-ZP	6	6	5.90	75	4.80	20.0	3	2
350-2060-30-ZP	6	6	5.90	75	4.80	30.0	3	2
350-2060-40-ZP	6	6	5.90	100	4.80	40.0	3	2
350-2060-50-ZP	6	6	5.90	100	4.80	50.0	3	2
350-2060-60-ZP	6	6	5.90	100	4.80	60.0	3	2

**Minimum order required. Contact sales@bestcarbide.com*

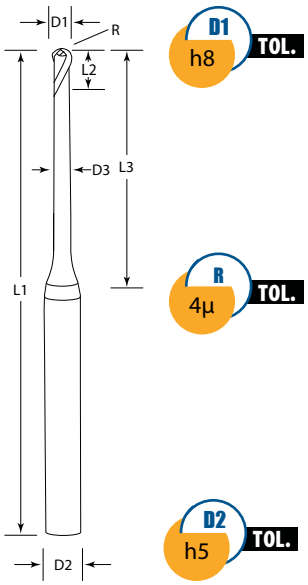

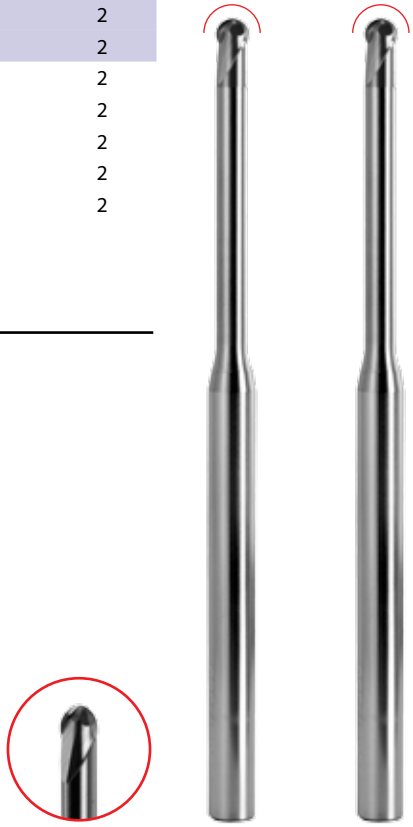

Special Tool Features and Advantages

- ★ True Diamond Coating (CVD)
- ★ Highest Grinding Accuracy
- ★ Special Neck Form for Greater Reach
- ★ Superior Grinding Finish

**Shown coated with CVD diamond Plus coating ("ZP"). For more coating information please refer to page 4.*

Tool Series 353 • HPC Carbide End Mills – Hard Milling

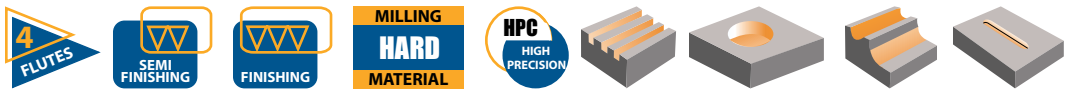

Uncoated Tool Number	Coated Tool Number	Size D1	Shank D2	O.A.L L1	L.O.C L2	Radius R	Flutes Z
353-4030	353-4030-T	3	6.0	50	4	1.5	4
353-4040	353-4040-T	4	6.0	50	6	2	4
353-4050	353-4050-T	5	6.0	50	7	2.5	4
353-4060	353-4060-T	6	6.0	50	9	3	4
353-4080	353-4080-T	8	8.0	63	12	4	4
353-4100	353-4100-T	10	10.0	75	15	5	4
353-4120	353-4120-T	12	12.0	75	18	6	4

**Best Carbide recommends hard milling applications only in coated conditions.*

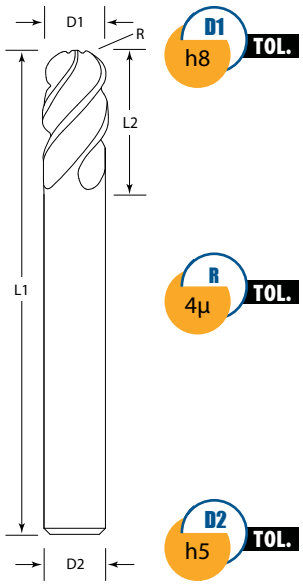

Special Tool Features and Advantages

- ★ **Radius Tolerance of ± 0.004 mm**
- ★ **Polished Rake Face**
- ★ **Superior Grinding Finish**

**Shown uncoated (left) and coated (right) with hard coating for hardened steels ≥ 50 HRC ("T"). For more coating information please refer to page 4.*

Tool Series 373 • HSC Super Accuracy Carbide End Mills for Aluminum

Uncoated Tool Number	Coated Tool Number	Size D1	Shank D2	Neck D3	O.A.L L1	L.O.C. L2	Reach L3	Radius R	Flutes Z
373-2010	373-2010-L	1	4.0	0.96	50	1	8	0.5	2
373-2020	373-2020-L	2	4.0	1.92	50	2	10	1	2
373-2030	373-2030-L	3	6.0	2.9	50	3	10	1.5	2
373-2040	373-2040-L	4	6.0	3.8	50	4	12	2	2
373-2050	373-2050-L	5	6.0	4.8	50	5	16	2.5	2
373-2060	373-2060-L	6	6.0	5.6	50	6	20	3	2
373-2080	373-2080-L	8	8.0	7.6	63	8	30	4	2
373-2100	373-2100-L	10	10.0	9.6	75	10	35	5	2
373-2120	373-2120-L	12	12.0	11.6	75	12	35	6	2

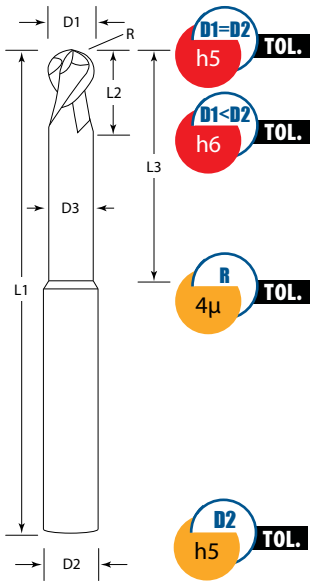

Special Tool Features and Advantages

- ★ Highest Tolerance Accuracy
- ★ Polished Rake Face
- ★ Superior Grinding Finish
- ★ Highest Grinding Accuracy

Cutting Diameter	h5	h6
1 mm –3 mm	+ 0.000 -0.004 mm	+ 0.000 -0.006 mm
> 3 mm – 6 mm	+ 0.000 -0.005 mm	+ 0.000 -0.008 mm
> 6 mm – 10 mm	+ 0.000 -0.006 mm	+ 0.000 -0.009 mm
> 10 mm – 12 mm	+ 0.000 -0.008 mm	+ 0.000 -0.011 mm

Shown uncoated (left) and coated (right) with HP coating for aluminum and non-ferrous materials ("L"). For more coating information please refer to page 4.

Tool Series 383 • HSC Super Accuracy Carbide End Mills for Aluminum – Extra Long Reach

2 FLUTES | SEMI FINISHING | FINISHING | MILLING SOFT MATERIAL | HSC HIGH SPEED

Uncoated Tool Number	Coated Tool Number	Size D1	Shank D2	Neck D3	O.A.L L1	L.O.C. L2	Reach L3	Radius R	Flutes Z
383-2030	383-2030-L	3	6	2.9	75	3	12	1.5	2
383-2040	383-2040-L	4	6	3.8	75	4	16	2	2
383-2050	383-2050-L	5	6	4.8	75	5	20	2.5	2
383-2060	383-2060-L	6	6	5.6	75	6	24	3	2
383-2080	383-2080-L	8	8	7.6	75	8	32	4	2
383-2100	383-2100-L	10	10	9.6	100	10	40	5	2
383-2120	383-2120-L	12	12	11.6	100	12	48	6	2
383-2160	383-2160-L	16	16	15.6	150	16	64	8	2
383-2200	383-2200-L	20	20	19.6	150	20	80	10	2

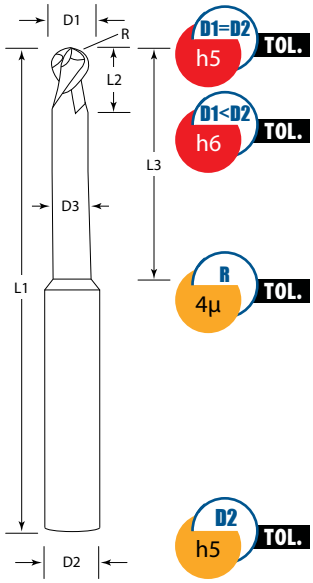

Special Tool Features and Advantages

- ★ Highest Tolerance Accuracy
- ★ Polished Rake Face
- ★ Superior Grinding Finish
- ★ Highest Grinding Accuracy

Cutting Diameter	h5	h6
3 mm	+ 0.000 -0.004 mm	+ 0.000 -0.006 mm
> 3 mm – 6 mm	+ 0.000 -0.005 mm	+ 0.000 -0.008 mm
> 6 mm – 10 mm	+ 0.000 -0.006 mm	+ 0.000 -0.009 mm
> 10 mm – 14 mm	+ 0.000 -0.008 mm	+ 0.000 -0.011 mm
> 14 mm – 18 mm	+ 0.000 -0.008 mm	+ 0.000 -0.011 mm
> 18 mm – 20 mm	+ 0.000 -0.009 mm	+ 0.000 -0.013 mm

Shown uncoated (left) and coated (right) with HP coating for aluminum and non-ferrous materials ("L"). For more coating information please refer to page 4.

Tool Series 403 • HFC Carbide End Mills – Variable Helix / Offset

Uncoated Tool Number	Size D1	Shank D2	Neck D3	O.A.L L1	L.O.C. L2	Reach L3	Radius R	Flutes Z	*Coating Choices
403-4010	1	4	0.96	50	1.5	8	0.5	4	-R / -A
403-4020	2	4	1.92	50	3.0	10	1	4	-R / -A
403-4030	3	6	2.9	50	4.5	10	1.5	4	-R / -A
403-4040	4	6	3.8	50	6.0	12	2	4	-R / -A
403-4050	5	6	4.8	50	7.5	16	2.5	4	-R / -A
403-4060	6	6	5.6	50	9.0	20	3	4	-R / -A
403-4080	8	8	7.6	63	12.0	30	4	4	-R / -A
403-4100	10	10	9.6	75	15.0	35	5	4	-R / -A
403-4120	12	12	11.6	75	18.0	35	6	4	-R / -A
403-4160	16	16	15.6	89	24.0	40	8	4	-R / -A
403-4200	20	20	19.6	100	38.0	55	10	4	-R / -A

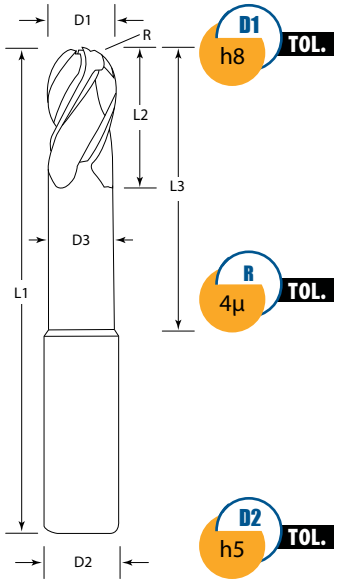

Special Tool Features and Advantages

- ★ **Reduced Harmonics and Vibrations**
- ★ **Unique Flute Form**
- ★ **Polished Land Width**
- ★ **Multiple Coating Options**
  - **"A"** AlTiN coating.
  - **"R"** Nano composite.

**Shown uncoated (left) and coated (right) with AlTiN coating ("A"). Add letter "A" for AlTiN coating or letter "R" for nano composite coating. Example: 403-4000-A. For more coating information please refer to page 4.*

Tool Series 410 • HFC Carbide End Mills – Variable Helix / Offset– Long Length / Reach

Uncoated Tool Number	Size D1	Shank D2	Neck D3	O.A.L L1	L.O.C. L2	Reach L3	Radius R	Flutes Z	*Coating Choices
410-4040	4	4	3.8	100	10	50	2	4	-R / -A
410-4050	5	6	4.6	100	13	50	2.5	4	-R / -A
410-4060	6	6	5.6	100	13	50	3	4	-R / -A
410-4080	8	8	7.6	100	19	50	4	4	-R / -A
410-4100	10	10	9.6	125	22	65	5	4	-R / -A
410-4120	12	12	11.6	150	26	75	6	4	-R / -A
410-4160	16	16	15.6	150	32	75	8	4	-R / -A
410-4200	20	20	19.6	150	40	100	10	4	-R / -A

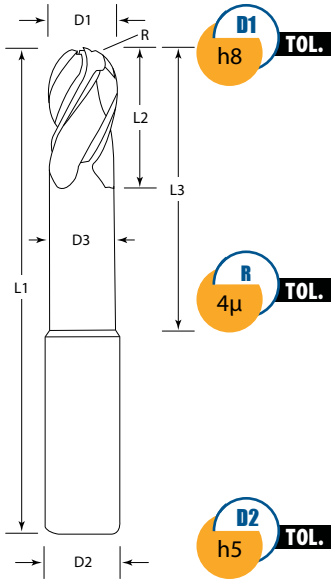

Special Tool Features and Advantages

- ★ **Reduced Harmonics and Vibrations**
- ★ **Unique Flute Form**
- ★ **Polished Land Width**
- ★ **Multiple Coating Options**
  - **"A"** AlTiN coating.
  - **"B"** HP coating for iron and alloyed steels ≤ 54 HRC.
  - **"R"** Nano composite.

Shown uncoated (left) and coated (right) with AlTiN coating ("A"). Add letter "A" for AlTiN coating or letter "R" for nano composite coating. Example: 410-4000-A. For more coating information please refer to page 4.

Tool Series 413 • HFC Carbide End Mills for Stainless Steel – Variable Helix / Offset

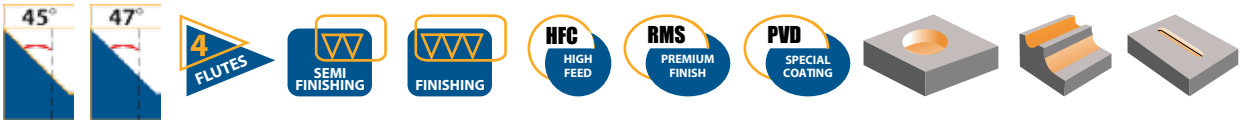

Uncoated Tool Number	Coated Tool Number	Size D1	Shank D2	Neck D3	O.A.L L1	L.O.C. L2	Reach L3	Radius R	Flutes Z	*Coating Choices
413-4010	413-4010-D	1	4	0.96	50	1.5	8	0.5	4	-D / -A
413-4020	413-4020-D	2	4	1.92	50	3	10	1	4	-D / -A
413-4130	413-4130-D	3	6	2.9	50	4.5	10	1.5	4	-D / -A
413-4040	413-4040-D	4	6	3.8	50	6	12	2	4	-D / -A
413-4050	413-4050-D	5	6	4.8	50	7.5	16	2.5	4	-D / -A
413-4060	413-4060-D	6	6	5.6	50	9	20	3	4	-D / -A
413-4080	413-4080-D	8	8	7.6	63	12	30	4	4	-D / -A
413-4100	413-4100-D	10	10	9.6	75	15	35	5	4	-D / -A
413-4120	413-4120-D	12	12	11.6	75	18	35	6	4	-D / -A

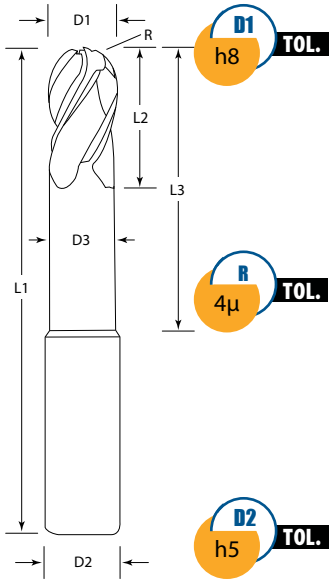

Special Tool Features and Advantages

- ★ **Reduced Harmonics and Vibrations**
- ★ **Unique Flute Form**
- ★ **Polished Land Width**
- ★ **Multiple Coating Options**
  - **"A"** AlTiN coating.
  - **"D"** HP coating recommended for stainless steels, titanium and high temperature alloys.

**Shown uncoated (left) and coated (right) with HP coating for stainless steels, titanium and hihg temperature alloys ("D"). Add letter "A" for AlTiN coating, or letter "D" for HP coating for stainless steels, titanium and high temperature alloys. Example: 413-4000-A. For more coating information please refer to page 4.*

Cutting Edge Preparation Technology

BEST CARBIDE'S Cutting Edge Technology

Advantages of Cutting Edge Preparation

- Improved tool life (up to 3x longer) and reduction of chipping (controlled cutting edge wear)
- Increased cutting tool performance - Higher speed and feed rates
- Stronger coating adhesion and coating droplets removal with post polishing applications
- Better surface finishes and dimensional accuracy of work pieces
- Decreased spindle load, vibration and chatter - Improved machining conditions
- Reduction of manufacturing cost

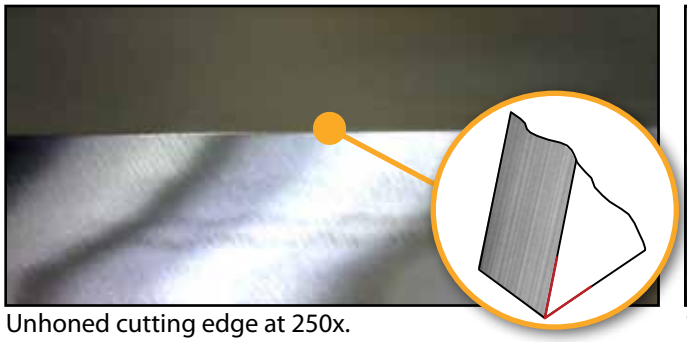

Unhoned cutting edge at 250x.

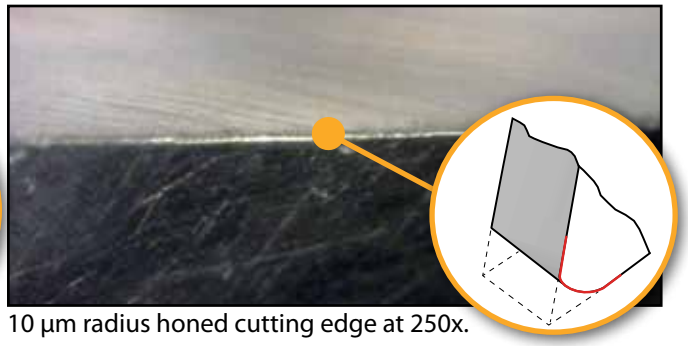

10 µm radius honed cutting edge at 250x.

Cutting Edge Preparation for Various Metal Applications

FE Cast Iron | SS Stainless Steel | C Carbon Steel | HS Hardened Steel | AS Alloy Steel

TI Titanium | TA Titanium Alloy | HT High Temp Alloy | NI Nickel Alloy

Size Range of Cutting Edge Preparations

Cutting Diameter: 2 mm - 6 mm **Width of Cutting Edge Preparation:** 5 microns

Cutting Diameter: 6 mm - 12 mm **Width of Cutting Edge Preparation:** 8 - 10 microns

Cutting Diameter: 12 mm - 16 mm **Width of Cutting Edge Preparation:** 12 - 14 microns

Special Carbide End Mills • Order Form

Best Carbide can help you. Our manufacturing expertise and 34-years of grinding experience enable us to meet and exceed your needs! Operating 101 CNC grinding machines, including 96 Rollomatic machines with 11 Nano grinders, allow us to produce a full range of special cutting tools. No matter whether you need **cylindrical (square)**, **corner radii**, **tapered** or **ball nose** end mills, we can produce your cutters to exacting tolerances of your drawings and samples. Please note, we can produce cutting diameters ranging from a world class small micro diameter of 0.050 mm to 20 mm in solid carbide with excellent concentricity values (flute: <0.003 mm; shank: < 0.002 mm) and a near perfect surface finish. Our radius tolerance is +/- 4 µm! Last but not least, we offer the very latest coating technology and utilize specific high performance coatings most suitable for your milling application.

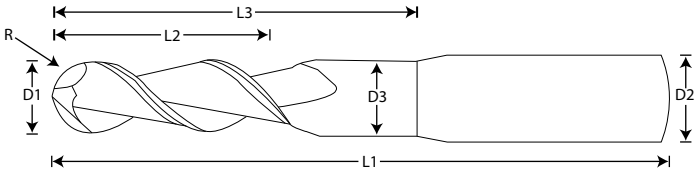

End Mill Dimensions

Cutting Diameter (D1): _____ Tolerance: _____

Shank Diameter (D2): _____ Tolerance: _____

Neck Diameter (D3): _____ Tolerance: _____

Overall Length (L1): _____ Tolerance: _____

Length of Cut (L2): _____ Tolerance: _____

Total Reach (L3): _____ Tolerance: _____

Number of Flutes: _____ Direction of Cut: _____ Helix Angle: _____

Workpiece Material: _____ Hardness: _____

Coating: _____

Quantity: _____

Notes: _____

_____

_____

_____

Contact Name: _____

Company Name: _____

Address: _____

City, State, Zip: _____

Country: _____

Phone / Fax: _____

Email: _____

Company & Process Technology

Operating with the most modern CNC machines and precision grinding equipment, Best Carbide is well equipped to meet the greatest demands for high precision crafted tools. The following key parameters describe our modern plant:

- 4,645 meters^2 of plant floor
- 13 center-less grinding machines
- 103 automated CNC tool grinding machines
- 98 Rollomatic & 3 Walter grinding machines

Measuring technology is vital for quality assurance and highest repeatability in production grinding. Best Carbide operates the following measuring machines:

Zoller Genius 3 Micron Measuring
with 2D and 3D Lens System

Walter Helicheck
Measuring Machine

Walter Micro Check
Measuring Machine

Our process technology assures greatest production consistency and most efficient use of our grinding machines while minimizing operator freedom. We operate the following quality assurance equipment for diamond wheels.

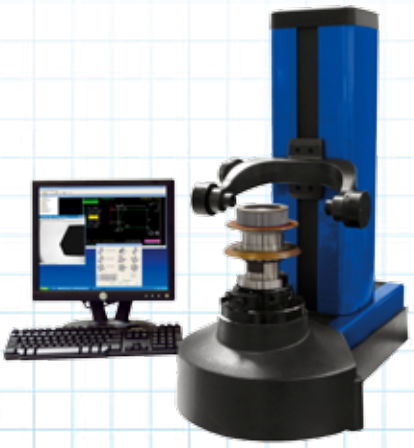

Rollomatic Tool Programming
& Diamond Wheel Presetting Station

Rollomatic Profilesmart
Diamond Wheel Dressing Machine

Rollomatic BMT 200S
Diamond Wheel Balancing Station

Images Courtesy of Rollomatic, Walter Machines and Zoller

Product Catalogs • Available by email sales@bestcarbide.com

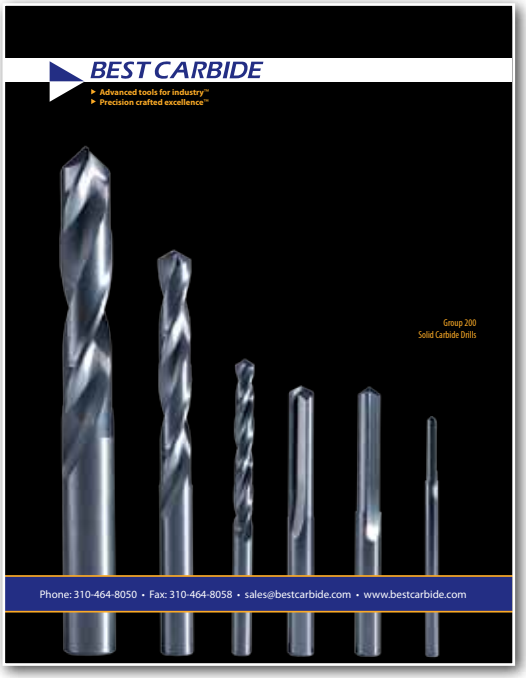

Group 200
Solid Carbide Drills | Inch & Metric

Group 300 - 400
Solid Carbide End Mills | Metric

www.bestcarbide.com

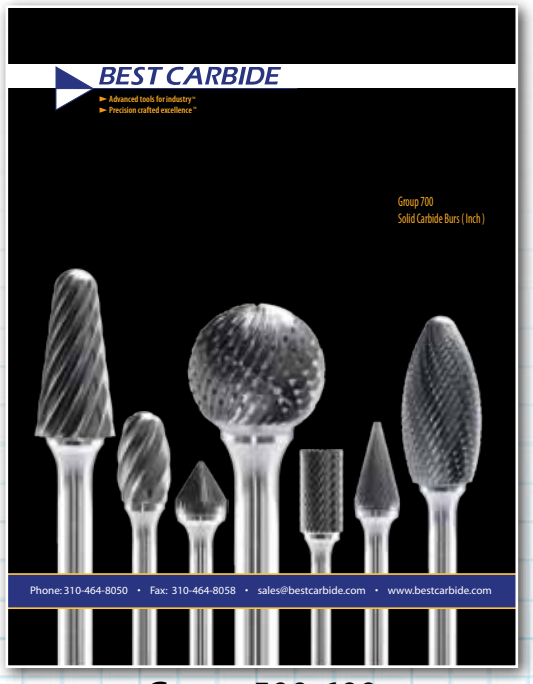

Group 500-600
Solid Carbide End Mills | Inch

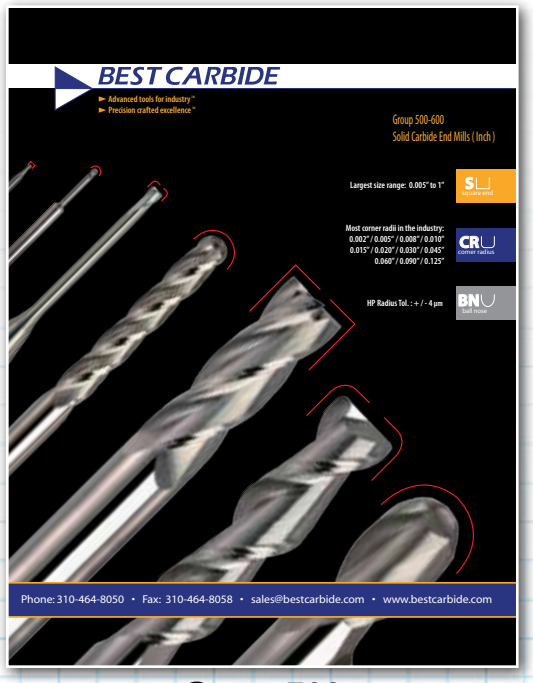

Group 700
Solid Carbide Burs | Inch & Metric

Product Line

Group 100:
Solid Carbide Routing Tools

- Complete selection of industry standard routers
- Up Cut / Down Cut Routers
- Fast Spiral / Slow Spiral Routers
- Single / Multi Flute Routers / Flex Cutters
- Inch / Metric Routers

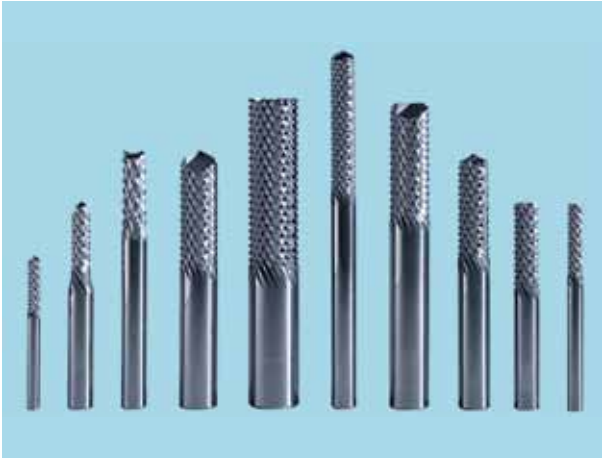

Group 200:
Solid Carbide Drills

- Jobber Length Drills (inch, wire, letter, metric)
- Stub Drills (inch, wire, letter, metric)
- Straight Flute Drills (inch, wire, letter, metric)
- Standard Circuit Board Drills (inch, wire, letter, metric)
- Reverse Shank CB Drills (inch, wire, letter, metric)
- Special High Performance Drills (inch, metric)
- Center Drills (inch)
- Drill Mills (inch)
- Spade Drills (inch)

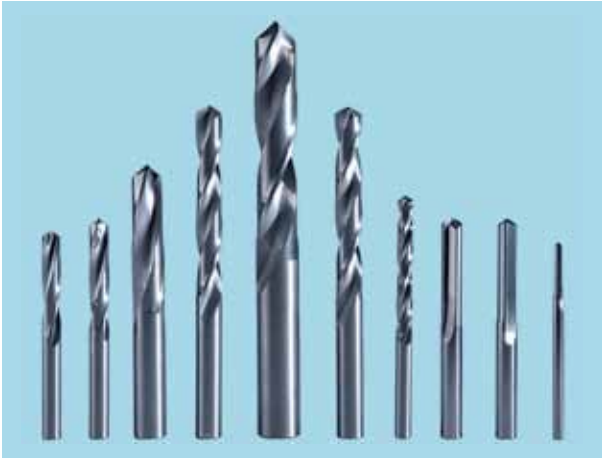

Group 300 - 400:
Solid Carbide End Mills (Metric)

- Complete Line (square / corner radius / radius)
- All Length Requirements (stub / regular / long / long reach)
- Widest Cutting Diameter Range (0.1 mm to 25 mm)
- Miniature End Mills
- Advanced HPC / HSC / HFC End Mills
- Focus on Aluminum, Steels, Hard Milling and Titanium
- Corner Radii (0.05 / 0.1 / 0.2 / 0.5 / 1.0 / 2.0)
- Neck Length (2 x D up to 20 x D)
- Special and Tapered End Mills
- Hi-Tech Coatings
- Perfect Milling Solutions for All Material Up to 70 HRC

Product Line

Group 500 - 600:
Solid Carbide End Mills (Inch)

- Complete Line (square / corner radius / radius)
- All Length Requirements (stub / regular / long / x- long)
- Widest Cutting Diameter Range (0.005 -1")
- Single End - Double End
- Universal Application and Special End Mills
- High Performance End Mills for Aluminum, Steels, High Temperature Alloys
- Special End Mills
- High Tech Coatings
- Perfect Milling Solutions for All Materials

Group 700:
Carbide Burs

- Standard Carbide Burs for Industrial Applications
- All Shapes - All Cuts - All Sizes (inch & metric)
- Long Shank Burs and Flex-Shank Burs
- Miniature Burs
- Aluma Cut Burs
- Beveling Cutters
- Dental Burs
- Special Burs
- Coarse Cut Burs

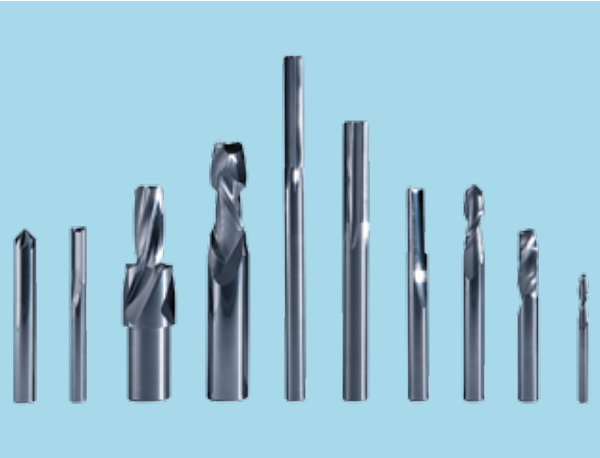

Group 900 - 1000:

- Special and Miscellaneous Round Carbide Cutting Tools
- Blue Print Special Tools for Industrial Applications
- Custom-Tailored Solutions
- Over 34-Years of Experience and Expertise
- Fast Service and Excellent Order Fulfillment

CATALOG
62013

BEST CARBIDE

BEST CARBIDE CUTTING TOOLS, INC.

1401 W. Walnut Street, Rancho Dominguez, CA 90220 USA

Phone: 310-464-8050 • Fax: 310-464-8058 • Web: www.bestcarbide.com • Email: sales@bestcarbide.com

- **Advanced tools for industry™**
- **Precision crafted excellence™**

Made in the USA